VN	VIETNAM

Diagram / Parts List

HP003G

Cordless Hammer Driver Drill

2026/08

(VN) HP003G / Cordless Hammer Driver Drill

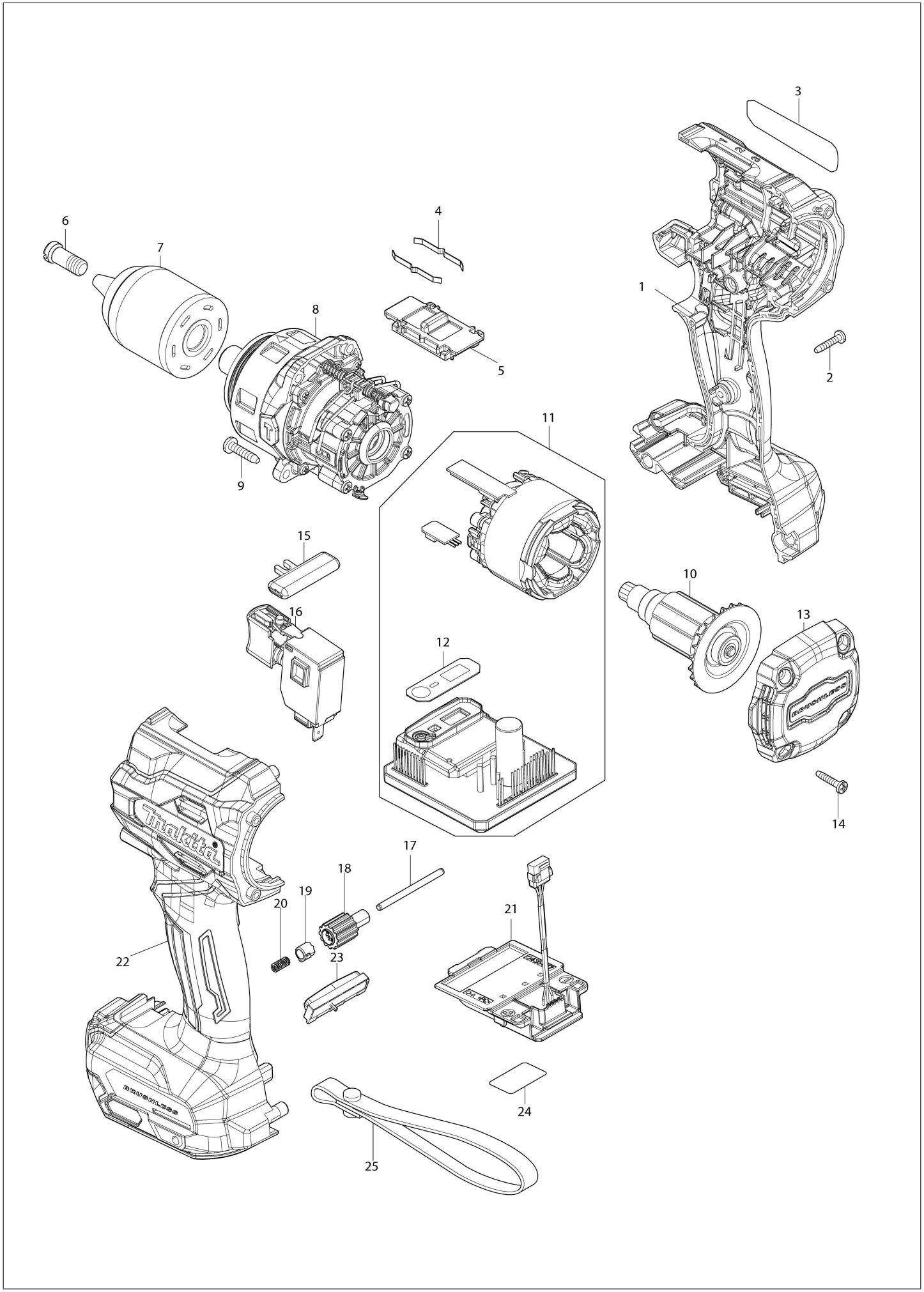

VN	VIETNAM

HP003G / Cordless Hammer Driver Drill

Item	Sub	Parts No.	Parts Description	Qty	I/C	E/C No.	Close No.	Remark
001		1831V5-6	Housing set	1				
	C10	263005-3	Rubber pin 6	2				
	C20	422569-8	Sponge sheet	2				
	C30	252126-6	Hex. lock nut M4-7	2				
	D10		INC. 22					
002		266130-9	Binding head tapping screw 3X16	7				
003		8152B3-5	Name plate HP003G	1				
004		232220-0	Leaf spring	2				
005		162E02-5	Speed change lever complete	1				
006		265E30-0	Slotted countersunk head screw M-...	1				
007		763269-4	Keyless drill chuck 13	1				
008		122J18-2	Gear assembly	1				
009		266326-2	Binding head tapping screw 4X18	4				
010		619907-5	Rotor	1				
011		529D23-8	Stator assembly 36V	1				
	D10		INC. 12					
012		8091G8-4	Switch label	1				
013		4132W4-0	Rear cover	1				
014		266130-9	Binding head tapping screw 3X16	4				
015		419041-9	F/R change lever	1				
016		650710-5	Switch C3JW-4B	1				
017		256949-4	Rod 3	1				
018		140R76-4	Dial complete	1				
019		313288-6	Dial cam	1				
020		232597-3	Compression spring 3	1				
021		632W77-1	Terminal unit	1				
022		1831V5-6	Housing set	1				
	C10	263005-3	Rubber pin 6	2				
	C20	422569-8	Sponge sheet	2				
	C30	252126-6	Hex. lock nut M4-7	2				
	D10		INC. 1					
023		620R06-6	LED circuit	1				
024		8152B5-1	Serial No. label HP003G	1				
025		163400-6	Hand strap	1				
A01		122J20-5	Grip assembly	1				
	C10	265785-7	Thumb screw M5X10	1				
A02		251314-2	Truss head screw M4X12	2				
A03		346317-0	Hook	1				
A04		452947-8	Bit holder	1				
A05		784637-8	Phillips slotted bit 2-45	2				
A06		122576-8	Stopper pole assembly	1				
F02		1917P9-8	Drill stand set	1				
F04		1918L5-4	DUST EXTRACTION PAD SET	1		E4116		
F06		1918R1-4	SEALING CAP B SET	1		E4116		
F07		1914X3-8	Dust extraction pad set	1		E4116		
F08		1918L7-0	DUST EXTRACTION PAD SET	1		E4116		
F10		1918P3-6	GUIDE RULE SET	1		E3189		

Interchange
O : Yes
X : No
< : the new part can be substituted for the current.
> : the current part can be substituted for the new.
S : Interchangeable as a set.