VN	VIETNAM

Diagram / Parts List

GD001G

CORDLESS DIE GRINDER

2025/08

(VN) GD001G / CORDLESS DIE GRINDER

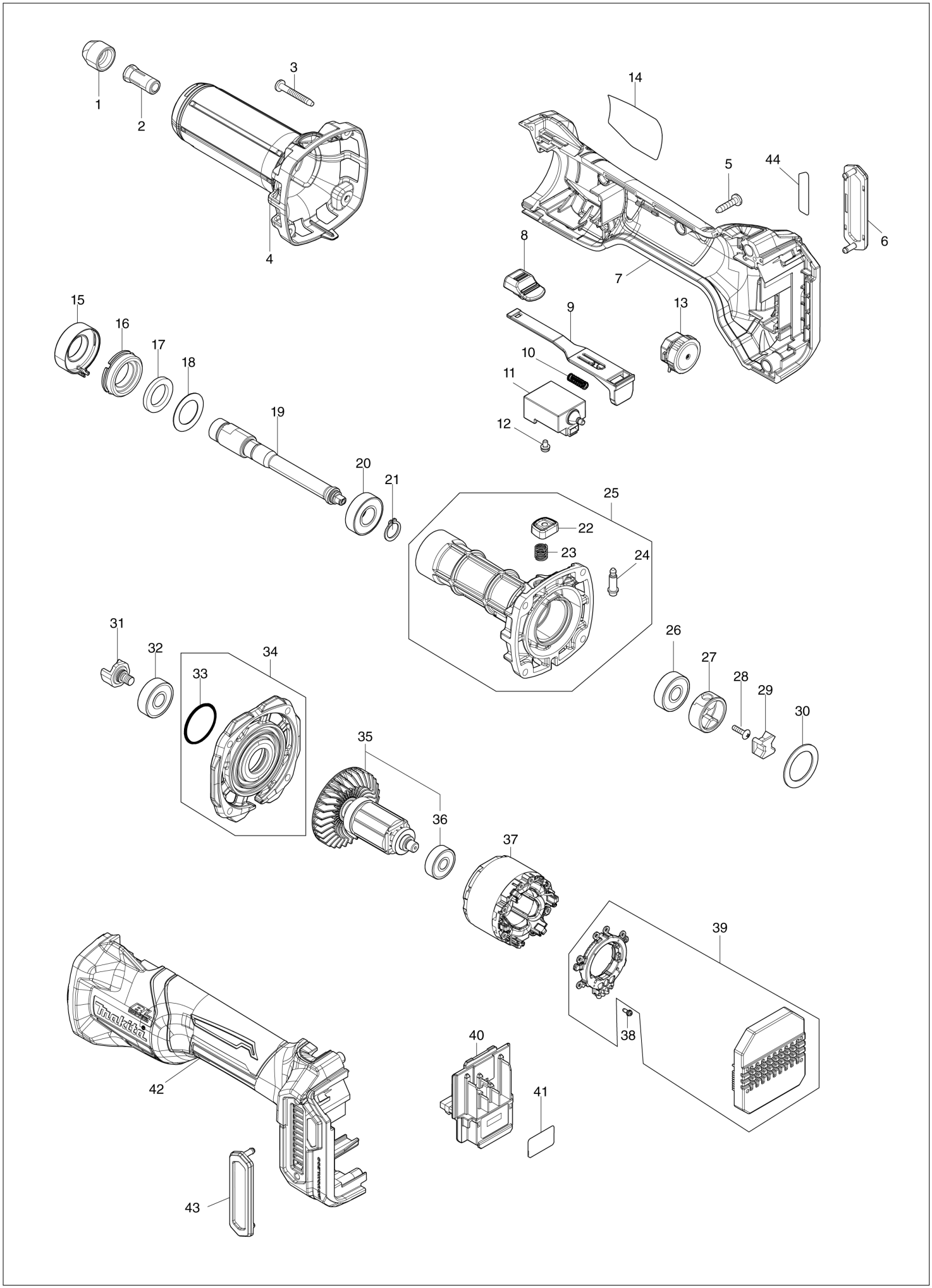

VN	VIETNAM

GD001G / CORDLESS DIE GRINDER

Item	Sub	Parts No.	Parts Description	Qty	I/C	E/C No.	Close No.	Remark
001		763668-0	COLLET NUT	1				
002		763670-3	COLLET CONE 6	1				
003		266361-0	TAPPING SCREW 4X30	4				
004		4132W8-2	INSULATION COVER	1				
005		266326-2	TAPPING SCREW 4X18	5				
006		422A12-3	DUST COVER	1				
007		1831L8-0	MOTOR HOUSING SET	1				
	C10	263005-3	RUBBER PIN 6	2				
	D10		INC. 42					
008		4132X3-9	SWITCH KNOB	1				
009		412233-9	SWITCH LEVER	1				
010		233121-5	COMPRESSION SPRING 4	1				
011		651445-1	SWITCH FPM-1130	1				
012		652047-6	+BIND SCREW M3.5X4.0	2				
013		620S09-6	DIAL CIRCUIT	1				
014		8151C8-6	GD001G NAME PLATE	1				
015		620S10-1	LED CIRCUIT	1				
016		285060-5	BEARING RETAINER 17-32	1				
017		443124-3	FELT RING 17	1				
018		267329-9	FLAT WASHER 18	1				
019		327F66-4	SPINDLE	1				
020		211142-7	BALL BEARING 6001LLB	1				
021		961052-5	RETAINING RING (EXT) S-12	1				
022		4132X2-1	PIN CAP	1				
023		234332-5	COMPRESSION SPRING 7	1				
024		256510-7	SHOULDER PIN 4	1				
025		137337-3	BARREL ASSY	1				
	D10		INC. 22-24					
026		210042-8	BALL BEARING 629LLB	1				
027		327F45-2	COUPLING A	1				
028		265E38-4	+TRUSS HEAD SCREW M3X12	1				
029		421942-9	SPACER	1				
030		267126-3	FLAT WASHER 22	1				
031		324639-8	COUPLING	1				
032		210042-8	BALL BEARING 629LLB	1				
033		213445-5	O-RING 26	1				
034		137338-1	MOTOR BRACKET ASSY	1				
	D10		INC. 33					
035		519917-1	ROTOR ASS'Y	1				
	D10		INC. 36					
036		210023-2	BALL BEARING 627DDW	1				
037		629C99-0	STATOR	1				
038		652119-7	PAN HEAD SCREW M2X6	6				
039		620S07-0	CONTROLLER	1				
040		632P65-6	TERMINAL UNIT	1				
041		8151D0-9	GD001G SERIAL NO. LABEL	1				
042		1831L8-0	MOTOR HOUSING SET	1				
	C10	263005-3	RUBBER PIN 6	2				
	D10		INC. 7					
043		422A12-3	DUST COVER	1				
044		8082A8-5	INDICATION LABEL	1				
A01		781039-9	WRENCH 13	1				

A:GD001GZ(N)

Interchange
O : Yes
X : No
< : the new part can be substituted for the current.
> : the current part can be substituted for the new.
S : Interchangeable as a set.