VN	VIETNAM

Diagram / Parts List

DDF490

CORDLESS DRIVER DRILL

2025/03

(VN) DDF490 / CORDLESS DRIVER DRILL

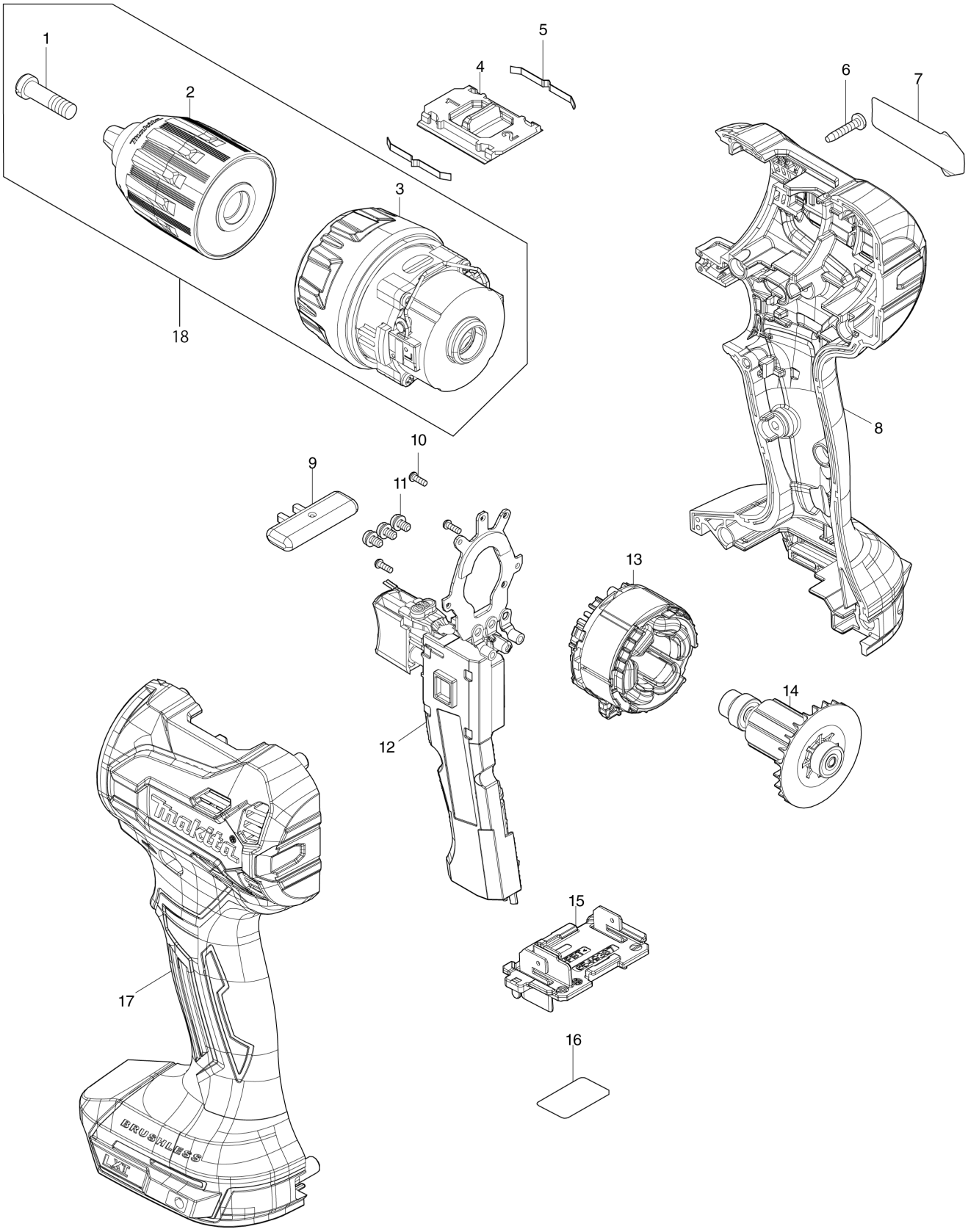

VN	VIETNAM

DDF490 / CORDLESS DRIVER DRILL

Item	Sub	Parts No.	Parts Description	Qty	I/C	E/C No.	Close No.	Remark
001		251468-5	- FLAT HEAD SCREW M6X22	1				
002		763260-2	KEYLESS DRILL CHUCK 13	1				
003		122H75-8	GEAR ASSEMBLY	1				
004		4132C1-6	SPEED CHANGE LEVER	1				
005		232220-0	LEAF SPRING	2				
006		266429-2	TAPPING SCREW 3X16	9				
007		8150A2-8	DDF490 NAME PLATE	1				
008		1831H5-8	HOUSING SET	1				
	C10	263005-3	RUBBER PIN 6	2				
	C20	252126-6	HEX. LOCK NUT M4-7	2				
	D10		INC. 17					
009		4132C2-4	F/R CHANGE LEVER	1				
010		266490-9	TAPPING SCREW PT 2X6	3				
011		652069-6	FLAT HEAD SCREW M3X6	3				
012		620R57-9	CONTROL MODULE	1				
013		629372-0	STATOR	1				
014		619899-8	ROTOR	1				
015		654938-7	TERMINAL	1				
016		8150A4-4	DDF490 SERIAL NO. LABEL	1				
017		1831H5-8	HOUSING SET	1				
	C10	263005-3	RUBBER PIN 6	2				
	C20	252126-6	HEX. LOCK NUT M4-7	2				
	D10		INC. 8					
018		122H73-2	GEAR CHUCK ASSEMBLY	1				
	D10		INC. 1-3					
A01B		832758-1	TOOL BAG	1				
A02B		***DC18SD	DC18SD BATTERY CHARGER	1				
	D10		COMPO-PARTS					
A03B		197600-6	BATTERY BL1830B SET	1				
A04B		450128-8	BATTERY COVER	1				
E01		163400-6	HANDSTRAP	1				

A:DDF490Z(N)
B:DDF490SFX(H)

Interchange
O : Yes
X : No
< : the new part can be substituted for the current.
> : the current part can be substituted for the new.
S : Interchangeable as a set.