VN	VIETNAM

Diagram / Parts List

DML817

CORDLESS WORKLIGHT

2022/12

(VN) DML817 / CORDLESS WORKLIGHT

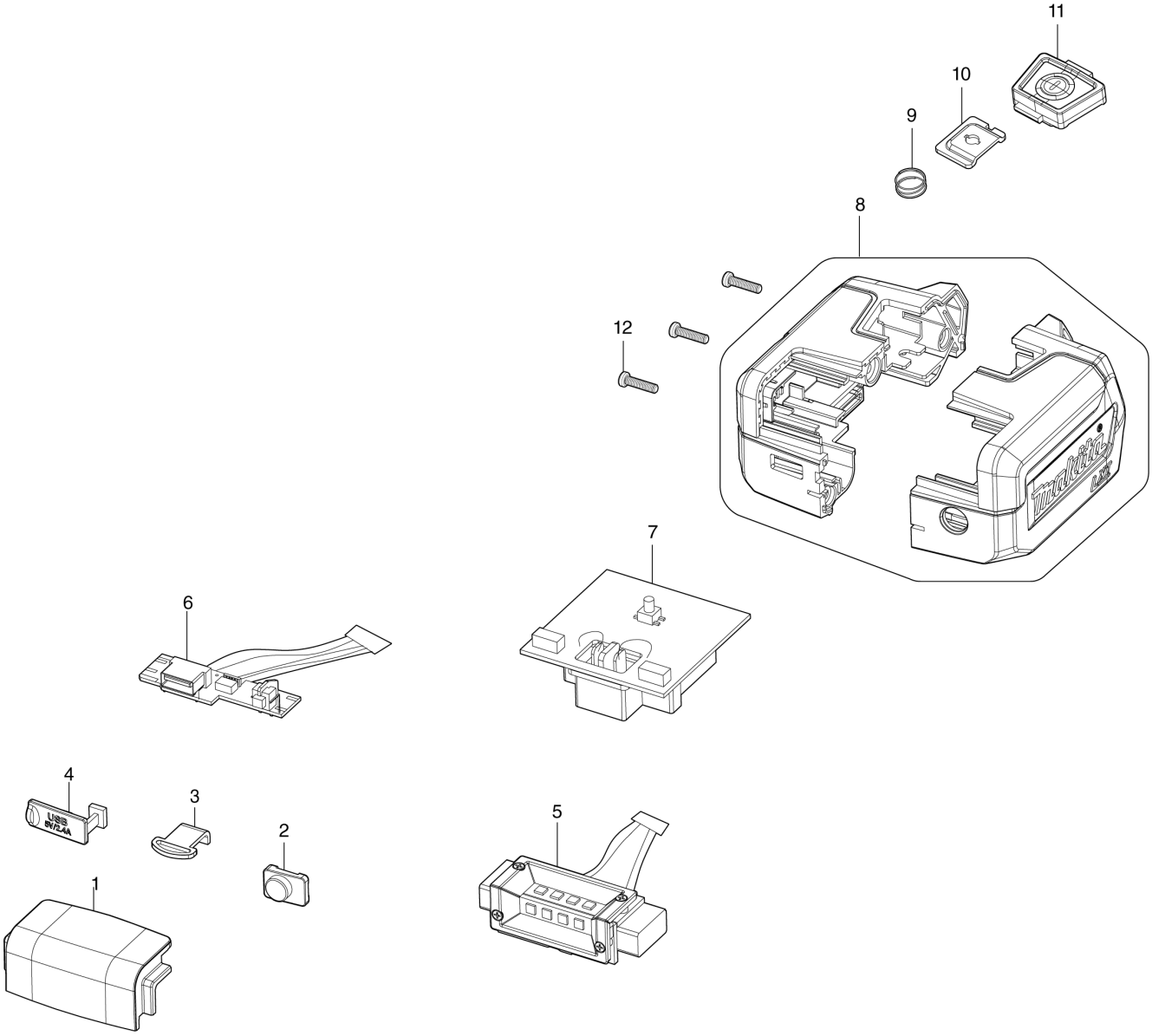

VN	VIETNAM

DML817 / CORDLESS WORKLIGHT

Item	Sub	Parts No.	Parts Description	Qty	I/C	E/C No.	Close No.	Remark
001		GM00002458	LENS	1				
002		GM00002459	USB SWITCH BUTTON	1				
003		GM00002460	STRAP HOOK	1				
004		GM00002461	USB COVER	1				
005		GM00002471	LED PCBA ASSY	1				
006		GM00002472	USB PCBA ASSY	1				
007		GM00002473	MAIN PCBA ASSY	1				
008		GM00002474	BODY ASSY BLUE	1				
009		GM00002468	SWITCH SPRING	1				
010		GM00002469	SWITCH SPRING BRACKET	1				
011		GM00002470	SWITCH ASSY	1				
012		GM00001012	SCREW 3X12 PB BLACK ZN	3				
A01		GM00002457	LAMP SHADE	1				

A:

Interchange
O : Yes
X : No
< : the new part can be substituted for the current.
> : the current part can be substituted for the new.
S : Interchangeable as a set.