VN	VIETNAM

Diagram / Parts List

DBO480

CORDLESS FINISHING SANDER

2021/12

(VN) DBO480 / CORDLESS FINISHING SANDER

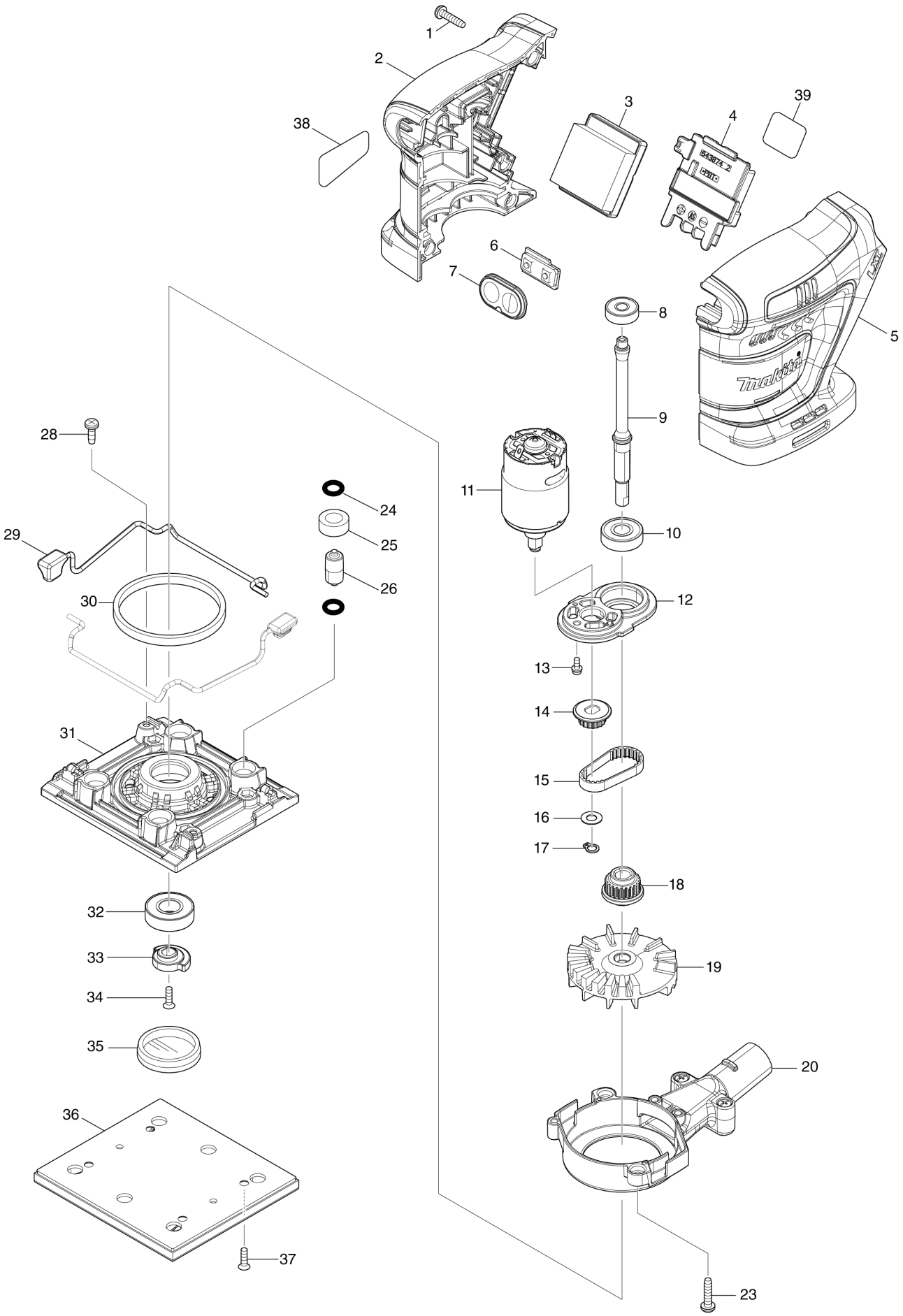

VN	VIETNAM

DBO480 / CORDLESS FINISHING SANDER

Item	Sub	Parts No.	Parts Description	Qty	I/C	E/C No.	Close No.	Remark
001		265995-6	TAPPING SCREW 4X18	5				
002		183U93-9	HOUSING SET	1				
	C10	263005-3	RUBBER PIN 6	2				
	D10		INC. 5					
003		632S80-8	CONTROLLER UNIT	1				
004		643874-2	TERMINAL	1				
005		183U93-9	HOUSING SET	1				
	C10	263005-3	RUBBER PIN 6	2				
	D10		INC. 2					
006		632K92-3	SWITCH UNIT	1				
007		141B15-1	SWITCH PLATE COMPLETE	1				
008		210143-2	BALL BEARING 626ZZ	1				
009		327807-2	SPINDLE	1				
010		211491-2	BALL BEARING 609DDW	1				
011		629B05-9	DC MOTOR	1				
012		413619-0	MOTOR BRACKET	1				
013		265173-8	PAN HEAD SCREW M3X8	1				
014		222200-4	PULLEY 7.5-15.5	1				
015		225105-7	SYNCHRO BELT 6-108	1				
016		253715-0	FLAT WASHER 6	1				
017		961002-0	RETAINING RING S-6	1				
018		222199-3	PULLEY 7.5-20.3	1				
019		240224-8	FAN 63	1				
020		122B40-1	FAN GUIDE ASSEMBLY	1				
023		265995-6	TAPPING SCREW 4X18	2				
024		213983-7	O RING 4	8				
025		424023-8	SPONGE SLEEVE 9	4				
026		318151-8	FOOT	4				
028		266020-6	TAPPING SCREW 4X12	2				
029		162259-8	LEVER COMPLETE	2				
030		424684-4	SPONGE 7X87X3	1				
031		413618-2	BASE	1				
	C10	252176-1	HEX. NUT M4	4				
032		211131-2	BALL BEARING 6001DDW	1				
033		313141-6	BALANCER	1				
034		912117-6	COUNTERSUNK HEAD SCREW M4X12	1				
035		422711-1	CAP 36	1				
036		191Y24-8	PAD COMPLETE SET	1				
037		912117-6	COUNTERSUNK HEAD SCREW M4X12	4				
038		8115T2-9	DBO480 NAME PLATE	1				
039		8115T5-3	DBO480 SERIAL NO. LABEL	1				
A01		191Y22-2	TRIANGLE PLATE COMPLETE SET	1				
A03		192352-4	ABRASIVE PAPER SET	2				
A04		192655-6	ABRASIVE PAPER SET	1				
A05		135222-4	DUST BAG ASS'Y	1				
	C10	166078-4	DUST BAG	1				
	C20	257202-1	RING 25	1				
	C30	416063-0	DUST BAG NOZZLE	1				
	C40	416064-8	DUST NOZZLE	1				
A06		450066-4	PUNCH PLATE	1				

Interchange
O : Yes
X : No
< : the new part can be substituted for the current.
> : the current part can be substituted for the new.
S : Interchangeable as a set.