VN	VIETNAM

Diagram / Parts List

DML807

RECHARGEABLE LED FLASHLIGHT

2021/01

(VN) DML807 / RECHARGEABLE LED FLASHLIGHT

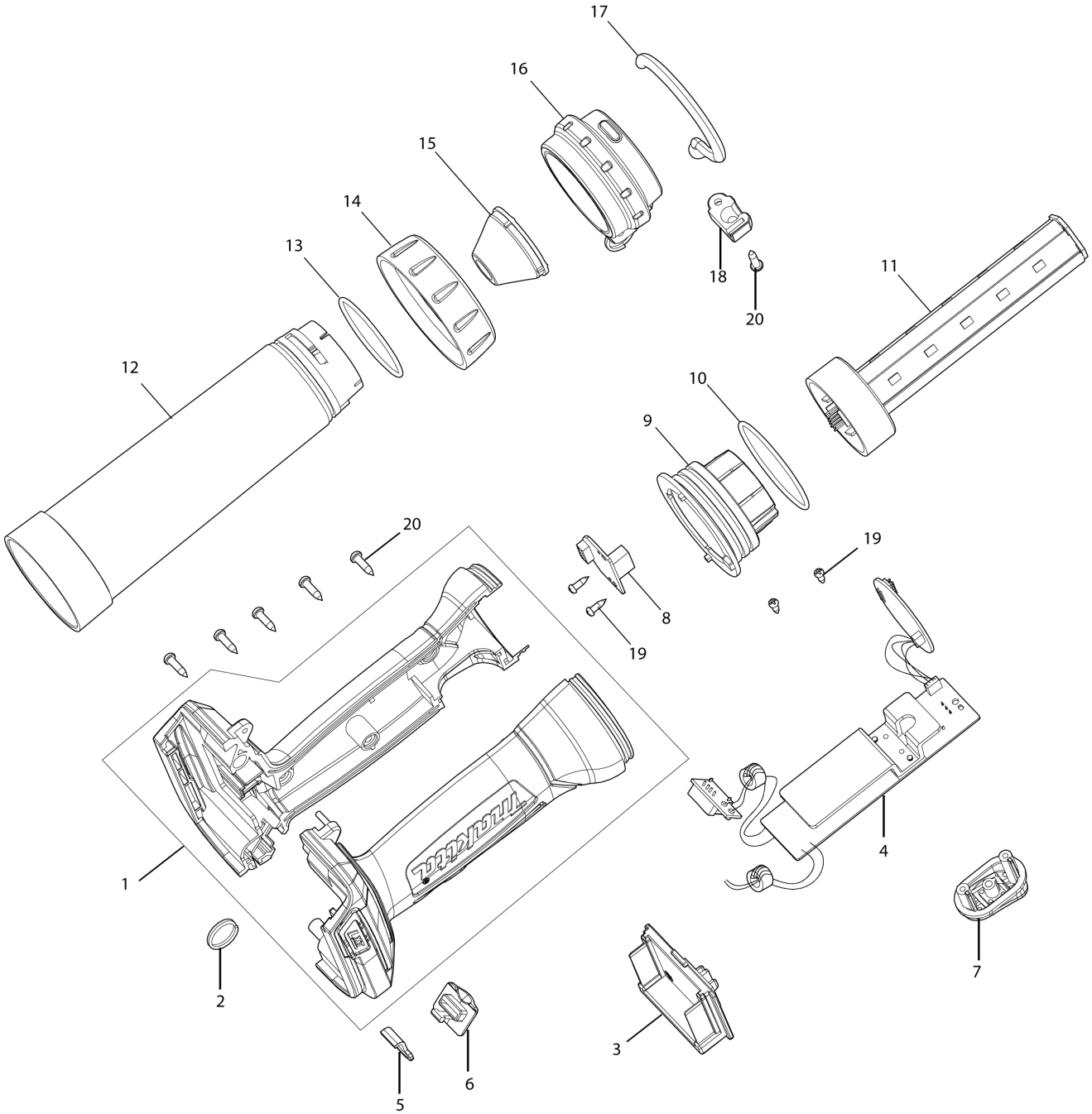

VN	VIETNAM

DML807 / RECHARGEABLE LED FLASHLIGHT

Item	Sub	Parts No.	Parts Description	Qty	I/C	E/C No.	Close No.	Remark
001		GM00001456	HOUSING L/R ASSY ROS88070006	1			Y07311	
001-1		GM00001669	HOUSING L/R ASSY ROS88070300	1	S	Y07311		
002		SM00000190	RING B3103184009	1				
003		GM00001457	BATTERY HOLDER ROS88070009	1				
004		GM00001458	MAIN+USB PCBA ASSY ROS88070005	1			Y07311	
004-1		GM00001670	MAIN+USB PCBA ASSY ROS88070301	1	S	Y07311	Y08448	
004-2		GM00002291		1	S	Y08448		
005		GM00001459	METAL STRAP HOOK B2808807021	1				
006		GM00001460	USB RUBBER COVER C9820807005	1				
007		GM00001461	SWITCH HOLDER ASSY ROS88070004	1				
008		GM00001462	FEMALE SOCKET PCBA ROS88070003	1				
009		GM00001463	LAMP HOLDER C1020807004	1				
010		GM00001464	O-RING (CAP) C9820807004	1				
011		GM00001465	LED LAMP TUBE ASSY ROS88070002	1				
012		GM00001466	DIFFUSING CAP ROS88070007	1				
013		GM00001467	O-RING C9820807003	1				
014		GM00001468	LOCK RING C0110184004	1				
015		GM00001469	REFLECTOR ROS88070008	1				
016		GM00001470	BEZEL ASSY ROS88070001	1				
017		GM00001471	HOOK ASSY ROS88070000	1				
018		GM00001472	HOOK BALL COVER C3020807002	1				
019		GM00001395	SCREW 2.6X8PB B0126081102	4				
020		GM00001024	SCREW 3X12 B0130120202	6				
021		GM00001671	USB SWITCH BUTTON C9020807001	1	S	Y07311	Y07370	
021-1		GM00001713	USB SWITCH BUTTON C9020807002	1	<	Y07370		
022		GM00001672	HEAT TRANSFER PAD A3252040000	1	S	Y07311		
023		GM00001673	USB SWITCH PCBA ROS88070302	1	S	Y07311		
024		GM00001689	METAL SPRING, B1312104021	1	S	Y08448		
025		GM00001690	PLASTIC SWITCH POST C102010400	1	S	Y08448		

Interchange
O : Yes
X : No
< : the new part can be substituted for the current.
> : the current part can be substituted for the new.
S : Interchangeable as a set.