VN	VIETNAM

Diagram / Parts List

DC64WA

CHARGER

2021/10

(VN) DC64WA / CHARGER

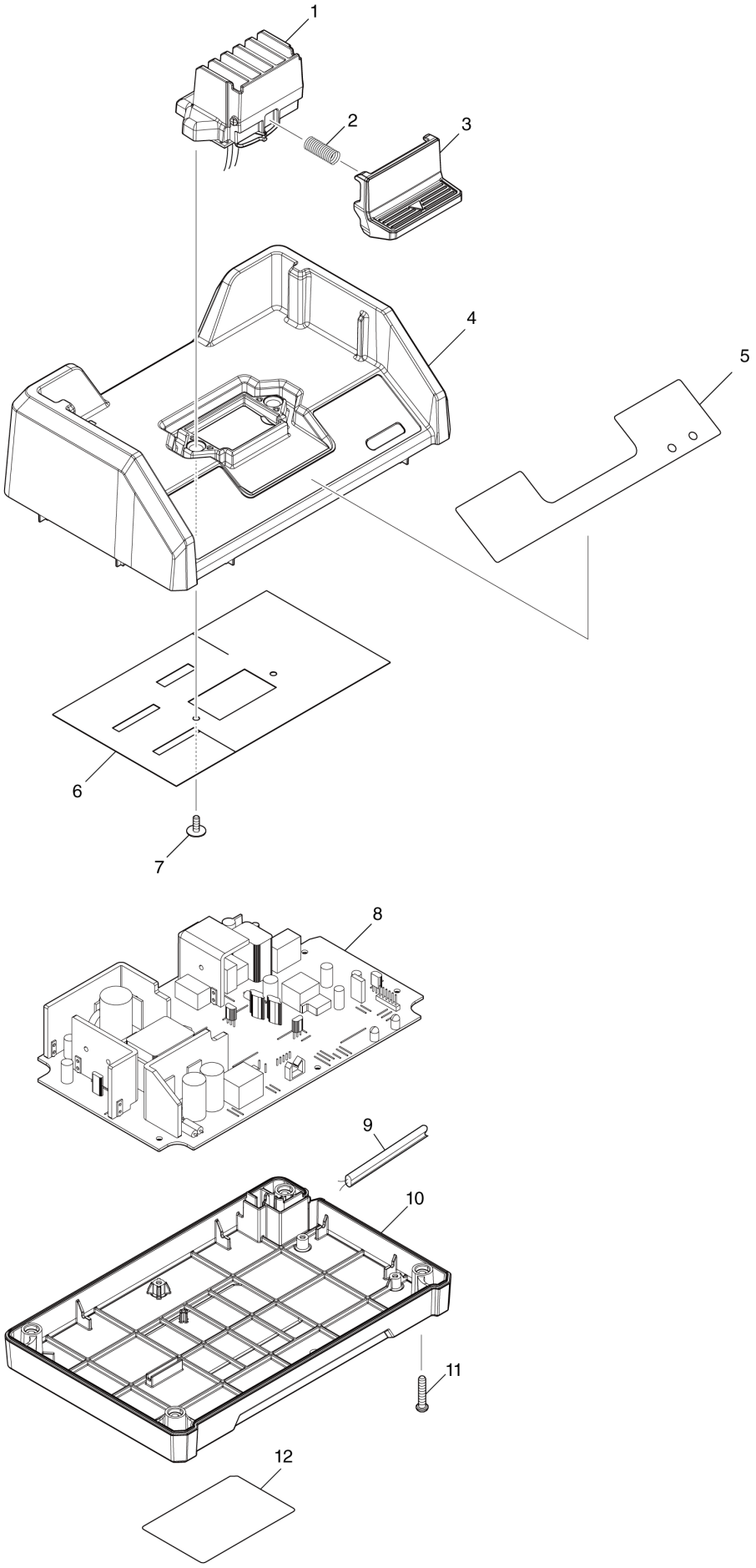

VN	VIETNAM

DC64WA / CHARGER

Item	Sub	Parts No.	Parts Description	Qty	I/C	E/C No.	Close No.	Remark
001		632S61-2	TERMINAL UNIT	1				
002		232693-7	COMPRESSION SPRING 8	1				
003		413507-1	HOOK	1				
004		183U92-1	CHARGER CASE SET	1				
	C10	413508-9	LENS	1				
	D10		INC. 5					
005		8034P1-1	CHARGING CONDITION LABEL	1				
006		689286-5	THERMAL DIFFUSION SHEET	1				
007		265B85-7	TAPPING SCREW FLANGE BT 3.5X10	2				
008		620G59-9	CHARGING CIRCUIT	1				
	C10	652120-2	FUSE	1				
	C20	652121-0	VARISTOR	1				
009		667746-7	POWER SUPPLY CORD	1				
010		413505-5	CHARGER CASE COVER	1				
011		266346-6	TAPPING SCREW BT 4X20	4				
012		811H79-2	DC64WA NAME PLATE	1				
F01		191W19-9	DC64WA BATTERY CHARGER SET	1				

Interchange
O : Yes
X : No
< : the new part can be substituted for the current.
> : the current part can be substituted for the new.
S : Interchangeable as a set.