| VN | VIETNAM |
| --- | --- |

# Diagram / Parts List

## DC4001

## CHARGER

2021/01

# (VN) DC4001 / CHARGER

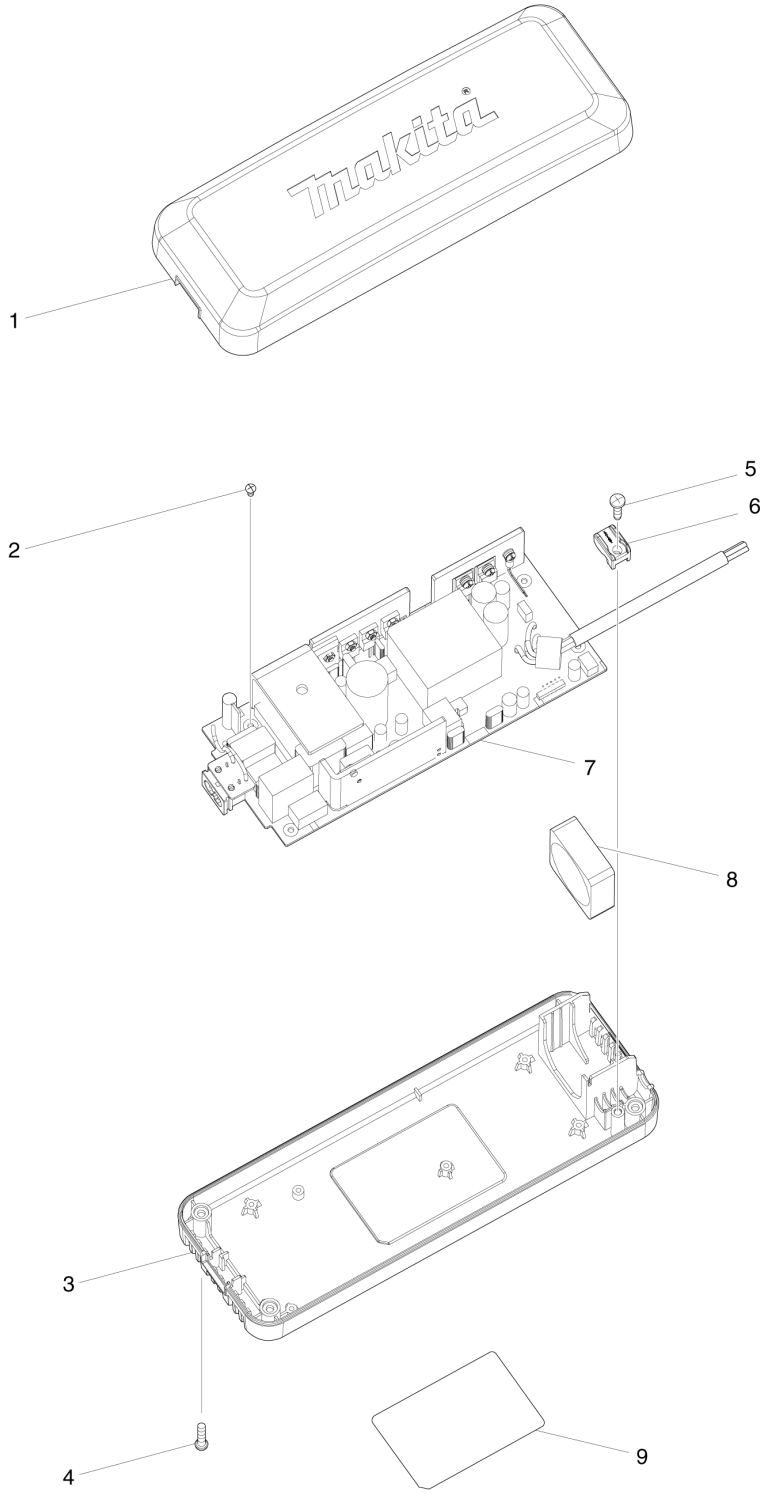

| VN | VIETNAM |
|---|---|

## DC4001 / CHARGER

| Item | Sub | Parts No. | Parts Description | Qty | I/C | E/C No. | Close No. | Remark |
|---|---|---|---|---|---|---|---|---|
| 001 | | TC00000113 | UPPER CASE | 1 | | | | |
| 002 | | TC00000114 | TAPPING SCREW 3X6 | 4 | | | | |
| 003 | | TC00000115 | UNDER CASE | 1 | | | | |
| 004 | | TC00000116 | TAPPING SCREW 4X20 | 4 | | | | |
| 005 | | TC00000117 | TAPPING SCREW 4X18 | 1 | | | | |
| 006 | | TC00000118 | CORD CLAMP | 1 | | | | |
| 007 | | TC00000119 | PCBA | 1 | | | | |
| 008 | | TC00000120 | FAN | 1 | | | | |
| 009 | | 857S72-8 | NAME PLATE | 1 | | | | |
| A01 | | 667234-4 | POWER SUPPLY CORD A | 1 | | | | |
| F01 | | 191L00-4 | DC4001 BATTERY CHARGER SET | 1 | | | | |

Interchange
O : Yes
X : No
< : the new part can be substituted for the current.
> : the current part can be substituted for the new.
S : Interchangeable as a set.