VN	VIETNAM

Diagram / Parts List

BCV03

BATTERY CONVERTER

2021/01

(VN) BCV03 / BATTERY CONVERTER

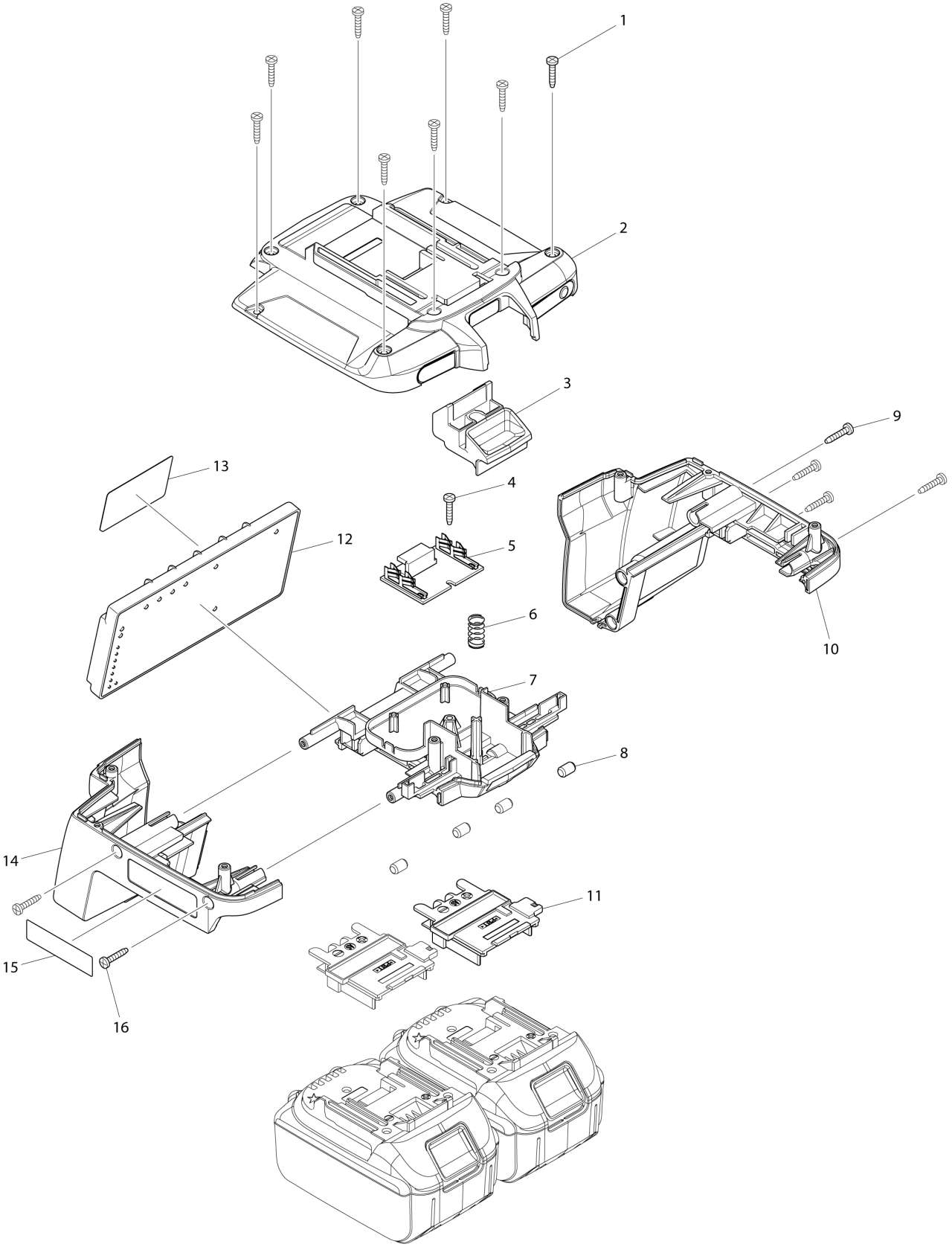

VN	VIETNAM

BCV03 / BATTERY CONVERTER

Item	Sub	Parts No.	Parts Description	Qty	I/C	E/C No.	Close No.	Remark
001		266130-9	TAPPING SCREW BIND PT 3X16	8				
002		141393-7	TOP COVER COMPLETE	1				
	C10	890759-5	CAUTION LABEL	1				
003		453383-1	HOOK	1				
004		266130-9	TAPPING SCREW BIND PT 3X16	1				
005		620071-7	TERMINAL BOARD COMPLETE	1				
006		234121-8	COMPRESSION SPRING 8	1				
007		453379-2	CENTER CASE	1				
008		263005-3	RUBBER PIN 6	4				
009		266130-9	TAPPING SCREW BIND PT 3X16	4				
010		187415-9	SIDE COVER SET	1			D0041	
	D10		INC. 14,15				D0041	
010-1		187415-9	SIDE COVER SET	1	<	D0041		
	D10		INC. 14,15			D0041		
011		643899-6	TERMINAL	2				
012		620307-4	ADAPTER CIRCUIT	1			A8756	
012-1		620471-1	ADAPTER CIRCUIT	1	<	A8756		
013		815R42-7	BCV03 NAME PLATE	1				
014		187415-9	SIDE COVER SET	1			D0041	
	D10		INC. 10,15				D0041	
014-1		187415-9	SIDE COVER SET	1	<	D0041		
	D10		INC. 10,15			D0041		
015		819232-6	MAKITA LOGO LABEL	1				
016		266130-9	TAPPING SCREW BIND PT 3X16	2				

Interchange
O : Yes
X : No
< : the new part can be substituted for the current.
> : the current part can be substituted for the new.
S : Interchangeable as a set.