VN	VIETNAM

Diagram / Parts List

TD091D

CORDLESS IMPACT DRIVER

2021/01

(VN) TD091D / CORDLESS IMPACT DRIVER

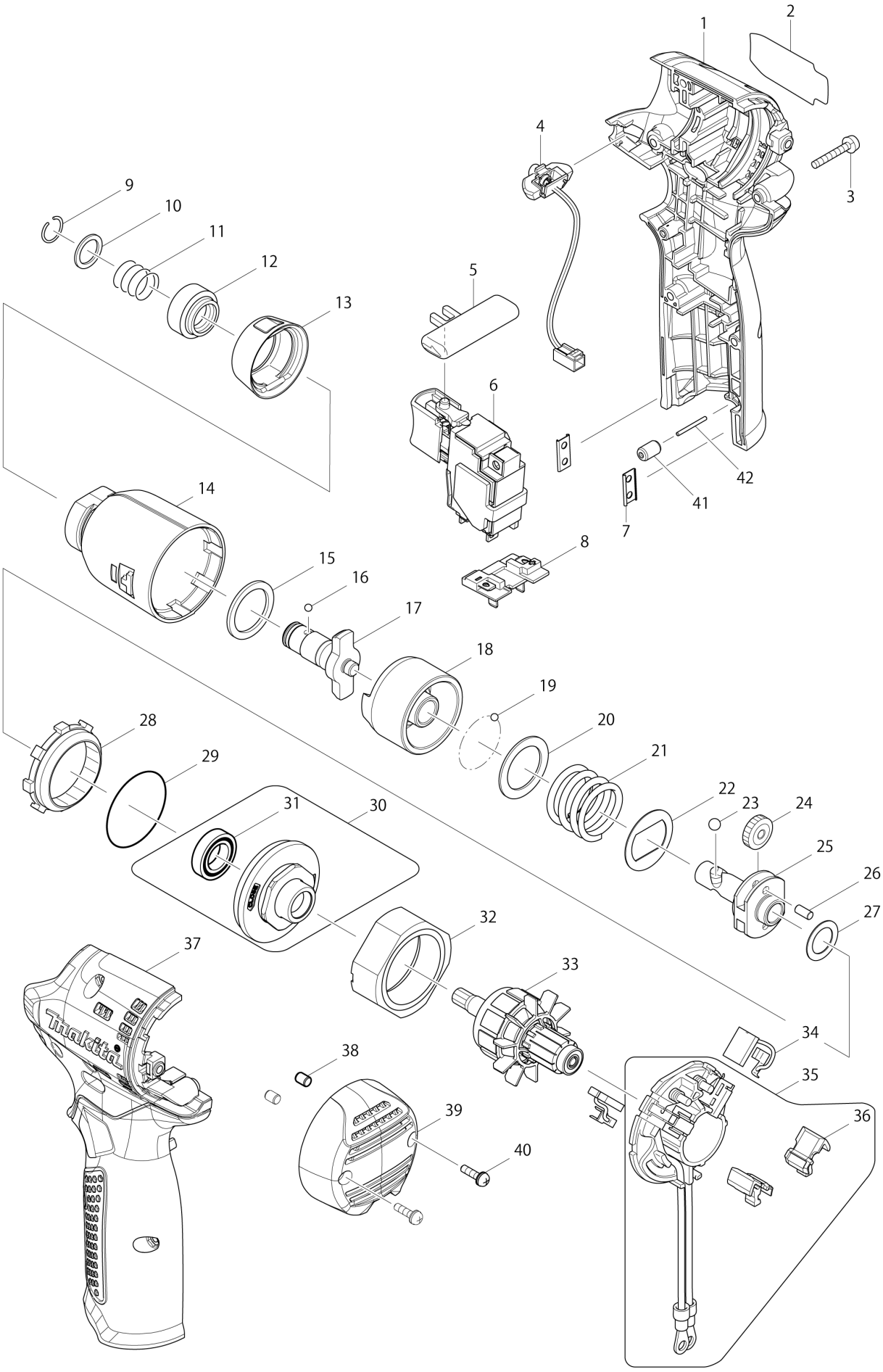

VN	VIETNAM

TD091D / CORDLESS IMPACT DRIVER

Item	Sub	Parts No.	Parts Description	Qty	I/C	E/C No.	Close No.	Remark
001		187572-3	HOUSING SET	1				
	D10		INC. 37					
002		814G43-6	TD091D NAME PLATE	1				
003		265095-2	PAN HEAD SCREW M3X20	6				
004		620189-4	LED CIRCUIT	1				
005		419041-9	F/R CHANGE LEVER	1				
006		650700-8	SWITCH TG573MSB-1	1				
007		345998-7	SET PLATE	2				
008		643830-2	TERMINAL	1				
009		231965-7	RING SPRING 10	1				
010		267143-3	FLAT WASHER 11	1				
011		233005-7	COMPRESSION SPRING 13	1				
012		162352-8	SLEEVE	1				
013		424550-5	BUMPER	1				
014		141892-9	HAMMER CASE COMPLETE	1				
	C10	213166-9	O RING 12.5	1				
015		261140-1	NYLON WASHER 20	1				
016		216019-1	STEEL BALL 3	2				
017		325618-9	ANVIL N	1			A8679	
017-1		326629-7	ANVIL N	1	<	A8679		
018		324894-2	HAMMER	1				
019		216019-1	STEEL BALL 3	24				
020		267380-9	FLAT WASHER 20	1				
021		234217-5	COMPRESSION SPRING 21	1				
022		267813-4	WASHER 21	1				
023		216002-8	STEEL BALL 4.8	2				
024		227213-0	SPUR GEAR 17	2			B0433	
024-1		221437-0	SPUR GEAR 17	2	<	B0433		
025		324897-6	SPINDLE	1				
026		268217-3	PIN 3.5	2				
027		253052-2	FLAT WASHER 12	1				
028		227316-0	INTERNAL GEAR 43	1				
029		213479-8	O RING 33	1				
030		141893-7	BEARING BOX COMPLETE	1				
	D10		INC. 31					
031		210112-3	BALL BEARING 6801LLB	1				
032		638396-5	YOKE UNIT	1				
033		619320-7	ARMATURE	1				
034		195021-6	CARBON BRUSH SET CB-440	1			C6032	
034-1		198887-3	CARBON BRUSH CB-5	1	S	C6032		
035		632A69-8	BRUSH HOLDER COMPLETE	1			C6032	
	D10		INC. 36				C6032	
035-1		632N40-0	BRUSH HOLDER COMPLETE	1	S	C6032	C6841	
035-2		638614-1	BRUSH HOLDER COMPLETE	1	O	C6841		
036		689181-9	SPACER	2			C6032	
037		187572-3	HOUSING SET	1				
	D10		INC. 1					
038		263032-0	RUBBER PIN 4	2				
039-1		455357-8	REAR COVER	1				
040		266816-5	+ PAN HEAD SCREW M3X12 WITH WR	2				
041		263038-8	RUBBER PIN 6	1				
042		268284-8	PIN 1.5	1				

Interchange
O : Yes
X : No
< : the new part can be substituted for the current.
> : the current part can be substituted for the new.
S : Interchangeable as a set.