VN	VIETNAM

Diagram / Parts List

UB001C

BATTERY POWERED BLOWER

2021/08

(VN) UB001C / BATTERY POWERED BLOWER

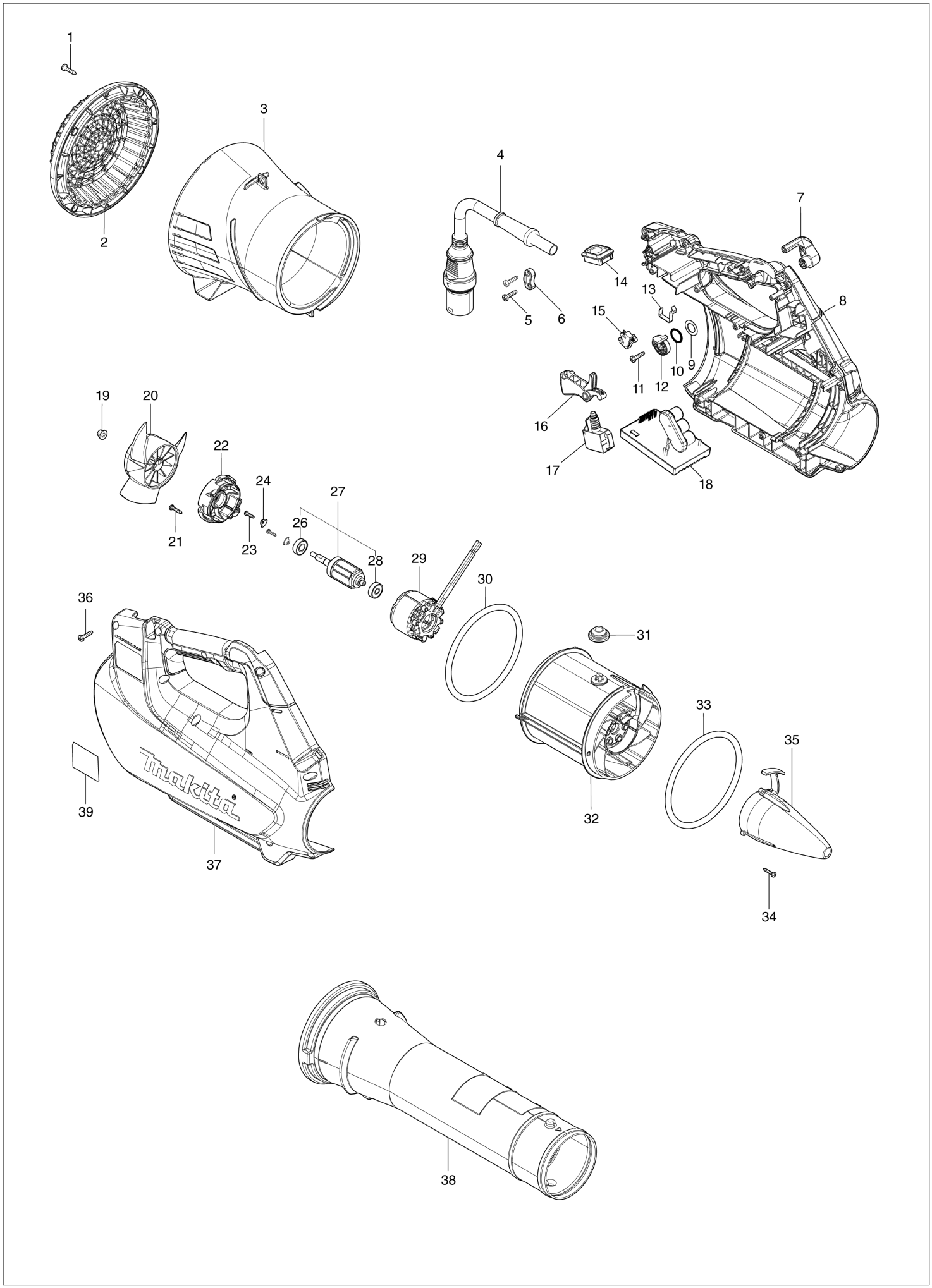

VN	VIETNAM

UB001C / BATTERY POWERED BLOWER

Item	Sub	Parts No.	Parts Description	Qty	I/C	E/C No.	Close No.	Remark
001		266326-2	TAPPING SCREW 4X18	4				
002		412749-4	REAR COVER	1				
003		140V33-6	REAR HOUSING COMPLETE	1				
004		699156-0	POWER SUPPLY CORD UNIT	1				
005		266326-2	TAPPING SCREW 4X18	2				
006		687149-9	STRAIN RELIEF	1				
007		412755-9	CONTROL LEVER	1				
008		183R61-4	HOUSING SET	1				
	C10	8011Y4-4	CAUTION LABEL	1				
	D10		INC. 37					
009		253798-0	FLAT WASHER 13	1				
010		213154-6	O RING 14	1				
011		266326-2	TAPPING SCREW 4X18	1				
012		412754-1	LINK	1				
013		232634-3	LEAF SPRING	1				
014		140X08-7	SWITCH CIRCUIT COMPLETE	1				
	C10	810D46-0	SWITCH LABEL	1				
015		632L48-2	SWITCH UNIT	1				
016		412756-7	SWITCH LEVER	1				
017		651436-2	SWITCH C3JW-1A-P-2	1				
018		620D15-1	CONTROLLER	1				
019		252286-4	COLLARED HEX.LOCK NUT M5-8	1				
020		240177-1	FAN 110	1				
021		266130-9	TAPPING SCREW BIND PT 3X16	4				
022		412753-3	MOTOR HOUSING COVER	1				
023		265893-4	TAPPING SCREW 3X12	2				
024		347733-9	RETAINER	2				
026		210040-2	BALL BEARING 698LLU	1				
027		519639-3	ROTOR ASS'Y	1				
	D10		INC. 26,28					
028		210022-4	BALL BEARING 626DDW	1				
029		629A15-0	STATOR	1				
030		424721-4	RUBBER RING 115	1				
031		424194-1	RUBBER RING 8	1				
032		412751-7	MOTOR HOUSING	1				
033		424721-4	RUBBER RING 115	1				
034		266130-9	TAPPING SCREW BIND PT 3X16	3				
035		412752-5	CAP	1				
036		266326-2	TAPPING SCREW 4X18	12				
037		183R61-4	HOUSING SET	1				
	C10	8011Y4-4	CAUTION LABEL	1				
	D10		INC. 8					
038		412757-5	FRONT PIPE	1				
039		857M75-6	UB001C NAME PLATE	1				
040		422734-9	SPONGE	1		D7479		
A01		191L94-9	BAND ASSEMBLY SET	1				
A02		412758-3	END NOZZLE 80	1			Y08692	
A02-1		191P97-7	END NOZZLE 80 SET	1	O	Y08692		

Interchange
O : Yes
X : No
< : the new part can be substituted for the current.
> : the current part can be substituted for the new.
S : Interchangeable as a set.