| VN | VIETNAM |
| --- | --- |

# Diagram / Parts List

## UT1305

## MIXER

2021/07

# (VN) UT1305 / MIXER

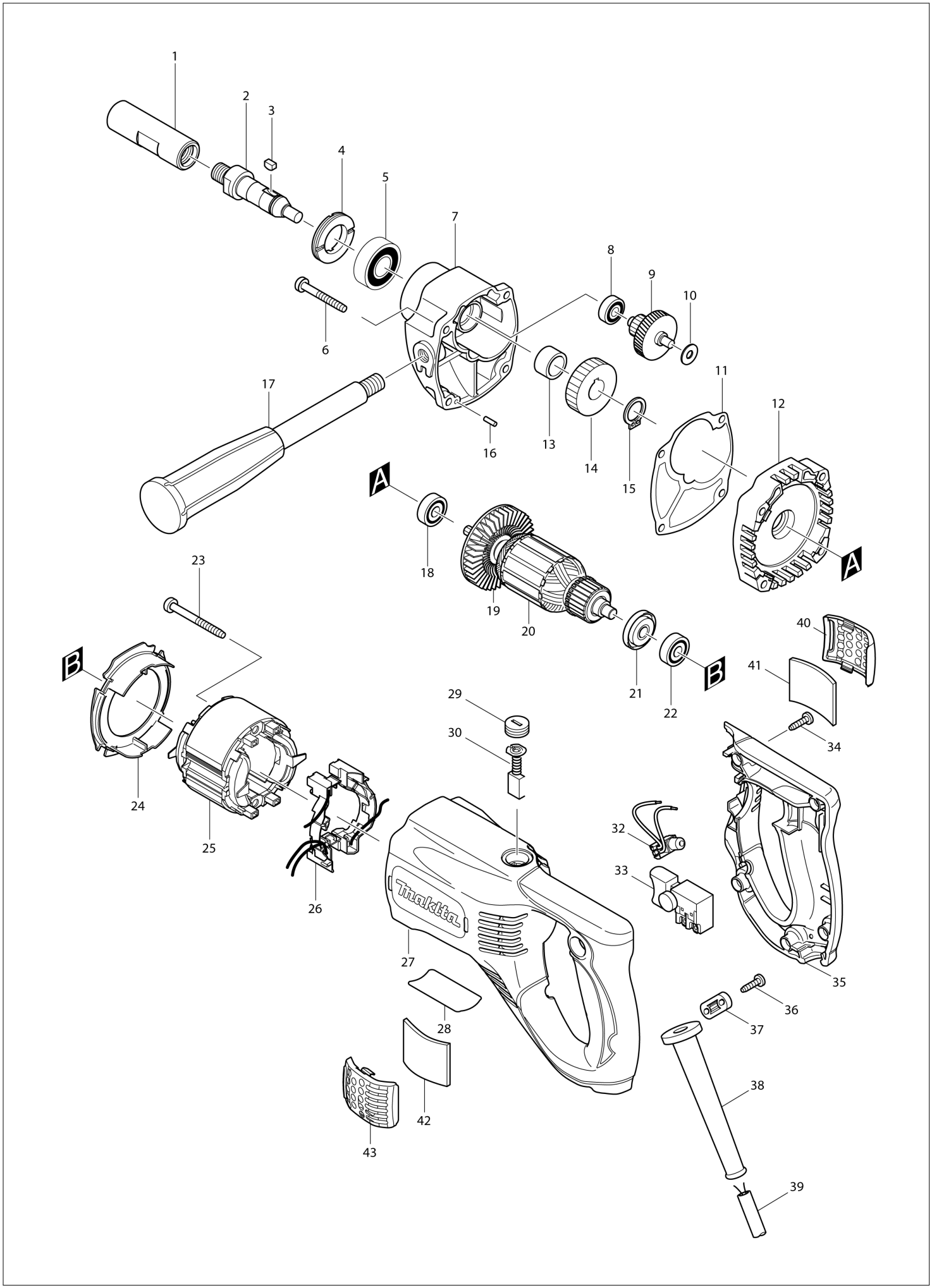

| VN | VIETNAM |
|---|---|

## UT1305 / MIXER

| Item | Sub | Parts No. | Parts Description | Qty | I/C | E/C No. | Close No. | Remark |
|---|---|---|---|---|---|---|---|---|
| 001 | | 323962-8 | SHAFT HOLDER 1/2-M12 | 1 | | | D5930 | |
| 001-1 | | 323962-8 | SHAFT HOLDER 1/2-M12 | 1 | < | D5930 | | |
| 002 | | 324259-8 | SPINDLE | 1 | | | | |
| 003 | | 254011-9 | WOODRUFF KEY 4 | 1 | | | | |
| 004 | | 285807-7 | BEARING RETAINER 22-36 | 1 | | | | |
| 005 | | 211206-7 | BALL BEARING 6202LLB | 1 | | | | |
| 006 | | 266211-9 | TAPPING SCREW 5X40 | 4 | | | | |
| 007 | | 317551-9 | GEAR HOUSING | 1 | | | | |
| 008 | | 211021-9 | BALL BEARING 607LLB | 1 | | | | |
| 009 | | 226153-9 | GEAR COMPLETE 12-41 | 1 | | | | |
| 010 | | 253804-1 | FLAT WASHER 6 | 1 | | | | |
| 011-1 | | 419528-1 | GASKET | 1 | | | | |
| 012 | | 153386-2 | GEAR HOUSING COVER COMPLETE | 1 | | | | |
| 013 | | 257719-4 | SLEEVE 15 | 1 | | | | |
| 014 | | 226559-1 | HELICAL GEAR 34 | 1 | | | | |
| 015 | | 961055-9 | RETAINING RING S-15 | 1 | | | | |
| 016 | | 256180-2 | PIN 3 | 1 | | | | |
| 017 | | 152892-4 | GRIP COMPLETE | 1 | | | | |
| 018 | | 211031-6 | BALL BEARING 608LLB | 1 | | | | |
| 019 | | 241850-6 | FAN 60 | 1 | | | | |
| 020 | | 513653-1 | ARMATURE ASS'Y 220V | 1 | | | | |
| | D10 | | INC. 18,19,21,22 | | | | | |
| 021 | | 681644-1 | INSULATION WASHER | 1 | | | | |
| 022 | | 211031-6 | BALL BEARING 608LLB | 1 | | | | |
| 023 | | 266046-8 | TAPPING SCREW 5X50 | 2 | | | | |
| 024 | | 419417-0 | BAFFLE PLATE | 1 | | | | |
| 025 | | 634553-3 | FIELD 220V | 1 | | | | |
| 026 | | 638439-3 | SUPPORT COMPLETE | 1 | | | | |
| 027 | | 154874-2 | MOTOR HOUSING COMPLETE | 1 | | | | |
| | C10 | 643708-9 | BRUSH HOLDER 5-11 | 2 | | | | |
| 028 | | 862262-6 | UT1305 NAME PLATE | 1 | | | | |
| 029 | | 643750-0 | BRUSH HOLDER CAP 7-11 | 2 | | | B4206 | |
| 029-1 | | 643515-0 | HOLDER CAP 7-11 | 2 | O | B4206 | | |
| 030-2 | | B-80379 | CARBON BRUSH SET CB-303A | 1 | | | | |
| 032 | | 631706-5 | PILOT LAMP | 1 | | | | |
| 033 | | 650203-2 | SWITCH SGEL115CD-1 | 1 | | | | |
| 034 | | 265995-6 | TAPPING SCREW 4X18 | 5 | | | | |
| 035 | | 419416-2 | HANDLE COVER | 1 | | | | |
| 036 | | 265995-6 | TAPPING SCREW 4X18 | 2 | | | | |
| 037 | | 687053-2 | STRAIN RELIEF | 1 | | | | |
| 038 | | 682566-8 | CORD GUARD 10 | 1 | | | | |
| 039 | | 691015-4 | POWER SUPPLY CORD 0.75-2-2.5 | 1 | | | | |
| 040 | | 345691-3 | COVER | 1 | | | | |
| 041 | | 423322-5 | FILTER | 1 | | | | |
| 042 | | 423322-5 | FILTER | 1 | | | | |
| 043 | | 345691-3 | COVER | 1 | | | | |
| A01-1 | | A-43692 | MIXING BLADE 165 | 1 | | | | |
| A02-1 | | A-43751 | SHAFT COMPLETE | 1 | | | Y08001 | |
| A02-2 | | 168349-5 | SHAFT COMPLETE | 1 | O | Y08001 | | |
| A03 | | 265220-5 | HEX. BOLT M8X18 | 1 | | | | |
| A04 | | 781006-4 | WRENCH 13 | 1 | | | | |
| A05 | | 781010-3 | WRENCH 19 | 2 | | | | |

Interchange
O : Yes
X : No
< : the new part can be substituted for the current.
> : the current part can be substituted for the new.
S : Interchangeable as a set.