| VN | VIETNAM |
|---|---|

# Diagram / Parts List

## UM600D

## 160MM CORDLESS GRASS SHEAR

2021/08

# (VN) UM600D / 160MM CORDLESS GRASS SHEAR

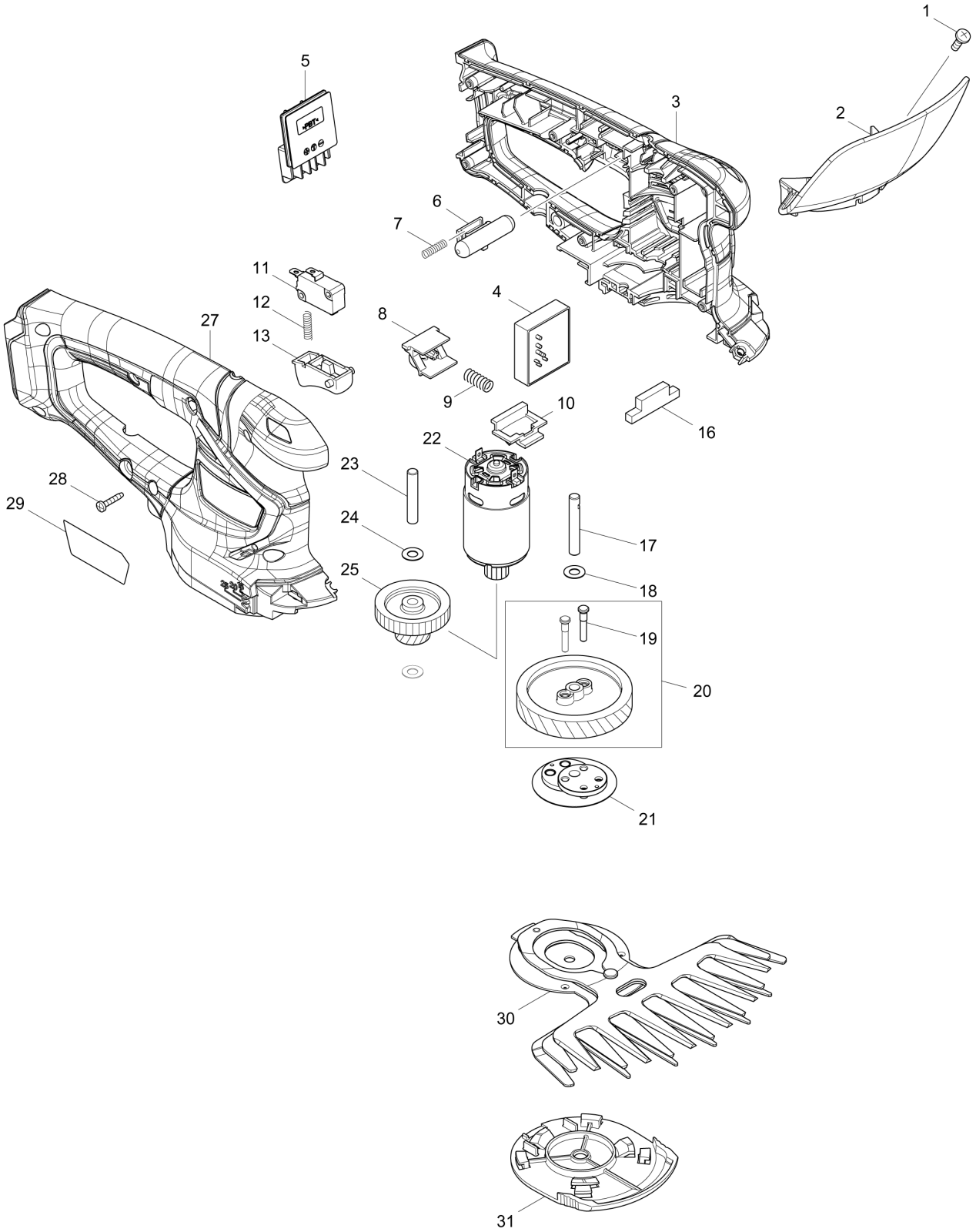

| VN | VIETNAM |
|---|---|

# UM600D / 160MM CORDLESS GRASS SHEAR

| Item | Sub | Parts No. | Parts Description | Qty | I/C | E/C No. | Close No. | Remark |
|---|---|---|---|---|---|---|---|---|
| 001 | | 915116-7 | BINDING HEAD SCREW M4X12 | 1 | | | | |
| 002 | | 144342-3 | PROTECTOR COMPLETE | 1 | | | D2683 | |
| | C10 | 819948-3 | CAUTION LABEL | 1 | | | D2683 | |
| 002-1 | | 140V97-0 | PROTECTOR COMPLETE | 1 | < | D2683 | | |
| | C10 | 819948-3 | CAUTION LABEL | 1 | | D2683 | | |
| 003 | | 183G04-0 | HOUSING SET | 1 | | | DB439 | |
| | C10 | 931102-0 | HEX. NUT M4 | 1 | | | DB439 | |
| | C20 | 263002-9 | RUBBER PIN 4 | 2 | | | DB439 | |
| | C30 | 346275-0 | PLATE | 2 | | | DB439 | |
| | D10 | | INC. 27 | | | | DB439 | |
| 003-1 | | 183U51-5 | HOUSING SET | 1 | S | DB439 | | |
| | C10 | 931102-0 | HEX. NUT M4 | 1 | | DB439 | | |
| | C20 | 263002-9 | RUBBER PIN 4 | 2 | | DB439 | | |
| | C30 | 346275-0 | PLATE | 2 | | DB439 | | |
| | D10 | | INC. 27 | | | DB439 | | |
| 004 | | 632K10-1 | CONTROLLER UNIT | 1 | | | D9894 | |
| 004-1 | | 632R77-1 | CONTROLLER UNIT | 1 | < | D9894 | | |
| 005 | | 644813-5 | TERMINAL | 1 | | | | |
| 006 | | 452438-9 | LOCK OFF BUTTON | 1 | | | DB439 | |
| 006-1 | | 413A16-6 | LOCK OFF BUTTON | 1 | S | DB439 | | |
| 007 | | 231473-8 | COMPRESSION SPRING 4 | 1 | | | | |
| 008 | | 457534-8 | SLIDE PLATE | 1 | | | | |
| 009 | | 234339-1 | COMPRESSION SPRING 6 | 1 | | | | |
| 010 | | 454879-5 | LOCK LEVER | 1 | | | | |
| 011 | | 650744-8 | SWITCH D3V-16-3C26 | 1 | | | | |
| 012 | | 231473-8 | COMPRESSION SPRING 4 | 1 | | | | |
| 013 | | 417564-1 | SWITCH LEVER | 1 | | | | |
| 016 | | 451814-4 | DUST GUARD | 1 | | | | |
| 017 | | 268254-7 | PIN 6 | 1 | | | | |
| 018 | | 253715-0 | FLAT WASHER 6 | 1 | | | | |
| 019 | | 268256-3 | PIN 4 | 2 | | | | |
| 020 | | 135883-0 | HELICAL GEAR 47 ASS'Y | 1 | | | | |
| | D10 | | INC. 19 | | | | | |
| 021 | | 161598-3 | CRANK COMPLETE | 1 | | | | |
| 022 | | 629258-8 | DC MOTOR | 1 | | | | |
| 023 | | 268076-5 | PIN 6 | 1 | | | | |
| 024 | | 253715-0 | FLAT WASHER 6 | 2 | | | | |
| 025 | | 226831-1 | GEAR 12-31 | 1 | | | | |
| 027 | | 183G04-0 | HOUSING SET | 1 | | | DB439 | |
| | C10 | 931102-0 | HEX. NUT M4 | 1 | | | DB439 | |
| | C20 | 263002-9 | RUBBER PIN 4 | 2 | | | DB439 | |
| | C30 | 346275-0 | PLATE | 2 | | | DB439 | |
| | D10 | | INC. 3 | | | | DB439 | |
| 027-1 | | 183U51-5 | HOUSING SET | 1 | S | DB439 | | |
| | C10 | 931102-0 | HEX. NUT M4 | 1 | | DB439 | | |
| | C20 | 263002-9 | RUBBER PIN 4 | 2 | | DB439 | | |
| | C30 | 346275-0 | PLATE | 2 | | DB439 | | |
| | D10 | | INC. 3 | | | DB439 | | |
| 028 | | 266429-2 | TAPPING SCREW 3X16 | 6 | | | | |
| 029 | | 852Y86-8 | UM600D NAME PLATE | 1 | | | | |
| 030 | | 195267-4 | SHEAR BLADE ASSEMBLY SET | 1 | | | D1118 | |
| | C10 | 188369-3 | OIL VESSEL SET | 1 | | | D1118 | |
| 030-1 | | 195267-4 | SHEAR BLADE ASSEMBLY SET | 1 | O | D1118 | | |
| | C10 | 188369-3 | OIL VESSEL SET | 1 | | D1118 | | |
| 031 | | 140451-6 | UNDER COVER COMPLETE | 1 | | | | |
| A01 | | 452055-5 | BLADE COVER | 1 | | | | |
| A02 | | 457426-1 | GRASS RECEIVER 160 | 1 | | | | |
| A06B | | 456128-6 | BATTERY COVER | 2 | | | | |
| A07B | | ***DC10SB | DC10SB BATTERY CHARGER | 1 | | | | |
| | D10 | | COMPO-PARTS | | | | | |
| A08B | | 197393-5 | BATTERY BL1016 SET | 2 | | | | |

B:UM600DSYE(H)

Interchange
O : Yes
X : No
< : the new part can be substituted for the current.
> : the current part can be substituted for the new.
S : Interchangeable as a set.