VN	VIETNAM

Diagram / Parts List

UB101D

CORDLESS BLOWER

2021/07

(VN) UB101D / CORDLESS BLOWER

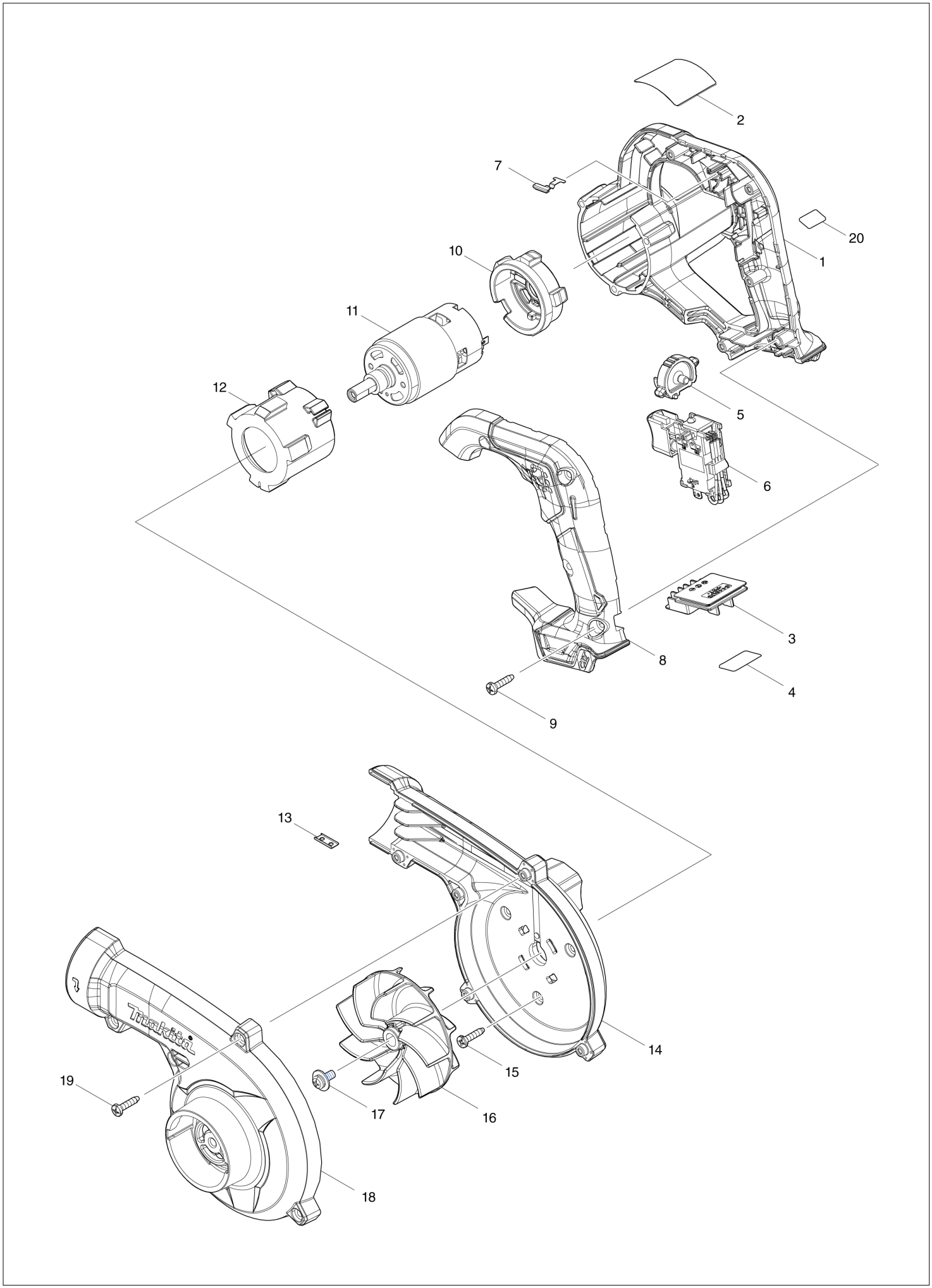

VN	VIETNAM

UB101D / CORDLESS BLOWER

Item	Sub	Parts No.	Parts Description	Qty	I/C	E/C No.	Close No.	Remark
001		183R73-7	MOTOR HOUSING SET	1				
	D10		INC. 8					
002		857R27-7	UB101D NAME PLATE	1				
003		644813-5	TERMINAL	1				
004		857R34-0	UB101D SERIAL NO. LABEL	1				
005		412573-5	DIAL	1				
006		632R60-8	SWITCH UNIT	1				
007		232620-4	LEAF SPRING	1				
008		183R73-7	MOTOR HOUSING SET	1				
	D10		INC. 1					
009		266326-2	TAPPING SCREW 4X18	5				
010		422589-2	MOTOR RUBBER RING B	1				
011		629A20-7	DC MOTOR	1				
012		422588-4	MOTOR RUBBER RING A	1				
013		345998-7	SET PLATE	1				
014		183R77-9	FAN HOUSING SET	1				
	C10	8012T7-9	CAUTION LABEL	1				
	D10		INC. 18					
015		266326-2	TAPPING SCREW 4X18	3				
016		240210-9	FAN 85	1				
017		265B25-5	PAN HEAD SCREW M5X12 WITH WG	1				
018		183R77-9	FAN HOUSING SET	1				
	C10	8012T7-9	CAUTION LABEL	1				
	D10		INC. 14					
019		266326-2	TAPPING SCREW 4X18	5				
A01		191G09-6	GARDEN NOZZLE ASSEMBLY SET	1				
	C10	412574-3	JOINT	1				

Interchange
O : Yes
X : No
< : the new part can be substituted for the current.
> : the current part can be substituted for the new.
S : Interchangeable as a set.