VN	VIETNAM

Diagram / Parts List

MT80A

10MM HAMMER DRILL

2021/01

(VN) MT80A / 10MM HAMMER DRILL

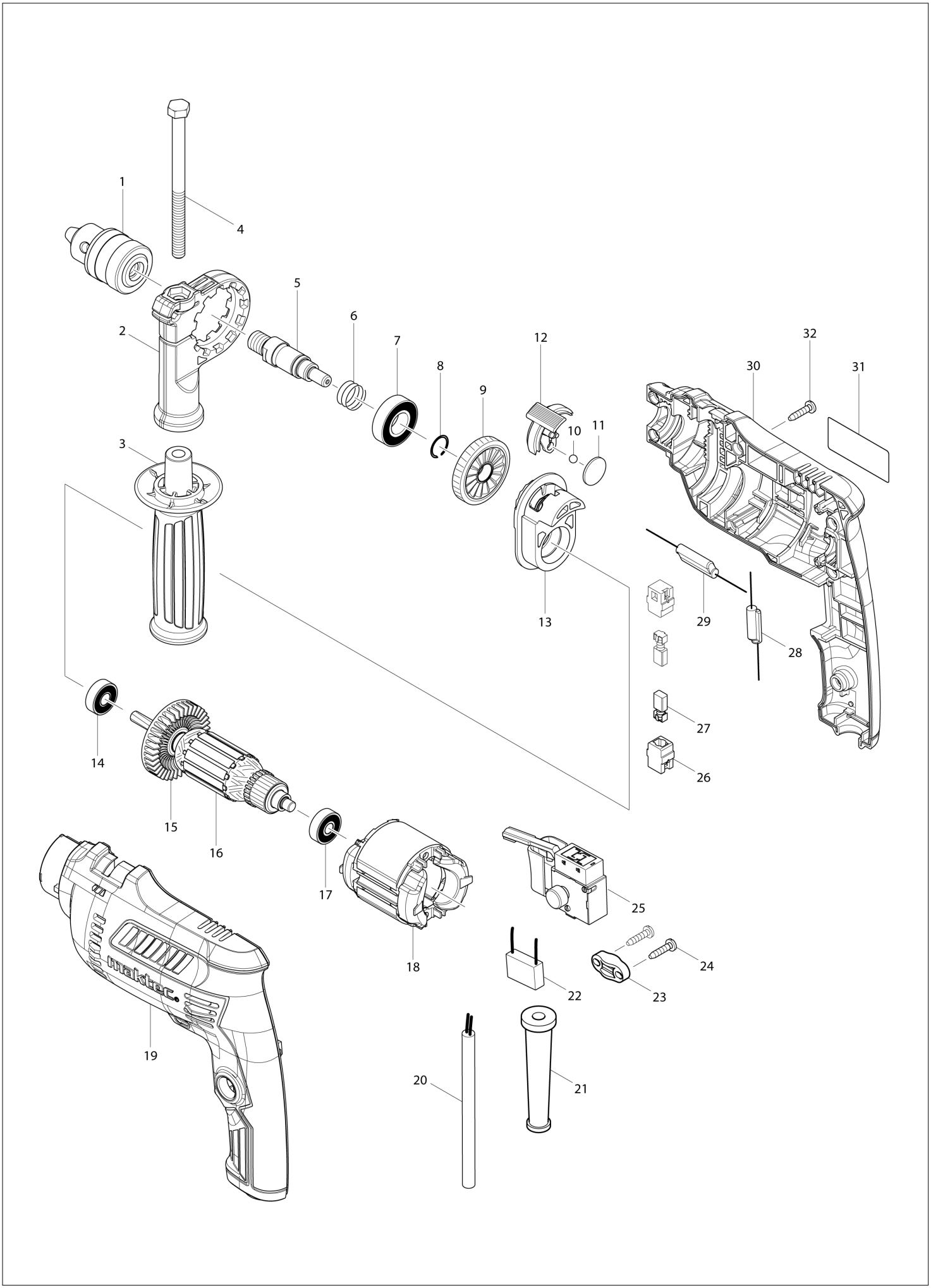

VN	VIETNAM

MT80A / 10MM HAMMER DRILL

Item	Sub	Parts No.	Parts Description	Qty	I/C	E/C No.	Close No.	Remark
001		766022-7	DRILL CHUCK S10	1				
002		454126-4	GRIP BASE	1				
003		142083-5	GRIP 36 COMPLETE	1				
004		265495-6	HEX. BOLT M8X110	1				
005		326278-0	SPINDLE	1				
006-1		234342-2	COMPRESSION SPRING 16	1				
007		211484-9	BALL BEARING 6002LLB	1				
008		233925-5	RING SPRING 13	1				
009		227764-3	HELICAL GEAR 39	1				
010		216038-7	STEEL BALL 5.0	1				
011		346676-2	PLATE 19	1				
012		454375-3	CHANGE LEVER	1				
013		142074-6	CAM HOLDER COMPLETE	1				
	C10	141994-1	CAM COMPLETE	1				
014-1		210044-4	BALL BEARING 608DDW	1				
015		240127-6	FAN 52	1				
016		515893-7	ARMATURE ASS'Y 220V	1				
	D10		INC. 14,15,17					
017-1		210045-2	BALL BEARING 627DDW	1				
018		633833-4	FIELD 220V	1			C2828	
018-1		633983-5	FIELD	1	<	C2828		
019		187667-2	HOUSING SET	1			B4438	
	C10	263002-9	RUBBER PIN 4	2			B4438	
	D10		INC. 30				B4438	
019-1		183E91-7	HOUSING SET	1	<	B4438		
	C10	263002-9	RUBBER PIN 4	2		B4438		
	D10		INC. 30			B4438		
020		691284-7	POWER SUPPLY CORD 0.75-2-2.0	1				
021		682569-2	CORD GUARD 8-85	1			A8686	
021-1		682583-8	CORD GUARD	1	O	A8686	B2599	
021-2		682583-8	CORD GUARD	1	<	B2599		
022		645190-8	NOISE SUPPRESSOR	1				
023		687124-5	STRAIN RELIEF	1				
024		266841-6	TAPPING SCREW 4X18	2				
025		650240-6	SWITCH FA2-4/1BEK	1				
026		643566-3	BRUSH HOLDER 5X8	2				
027		194973-8	CARBON BRUSH SET CB-85	1				
028		646147-2	CHOKE COIL	1			B0969	
028-1		646231-3	CHOKE COIL	1	O	B0969	C6891	
028-2		646147-2	CHOKE COIL	1	O	C6891		
029		646153-7	CHOKE COIL	1			B0969	
029-1		646230-5	CHOKE COIL	1	O	B0969	C6891	
029-2		646153-7	CHOKE COIL	1	O	C6891		
030		187667-2	HOUSING SET	1			B4438	
	C20	263002-9	RUBBER PIN 4	2			B4438	
	D10		INC. 19				B4438	
030-1		183E91-7	HOUSING SET	1	<	B4438		
	C20	263002-9	RUBBER PIN 4	2		B4438		
	D10		INC. 19			B4438		
031		814K92-7	MT80A NAME PLATE	1		A8899		
032		266841-6	TAPPING SCREW 4X18	7				
A01		763452-3	CHUCK KEY S10	1				
A02		418163-2	KEY HOLDER 10	1				

Interchange
O : Yes
X : No
< : the new part can be substituted for the current.
> : the current part can be substituted for the new.
S : Interchangeable as a set.