VN	VIETNAM

Diagram / Parts List

MT653

6.5MM HIGH SPEED DRILL

2021/01

(VN) MT653 / 6.5MM HIGH SPEED DRILL

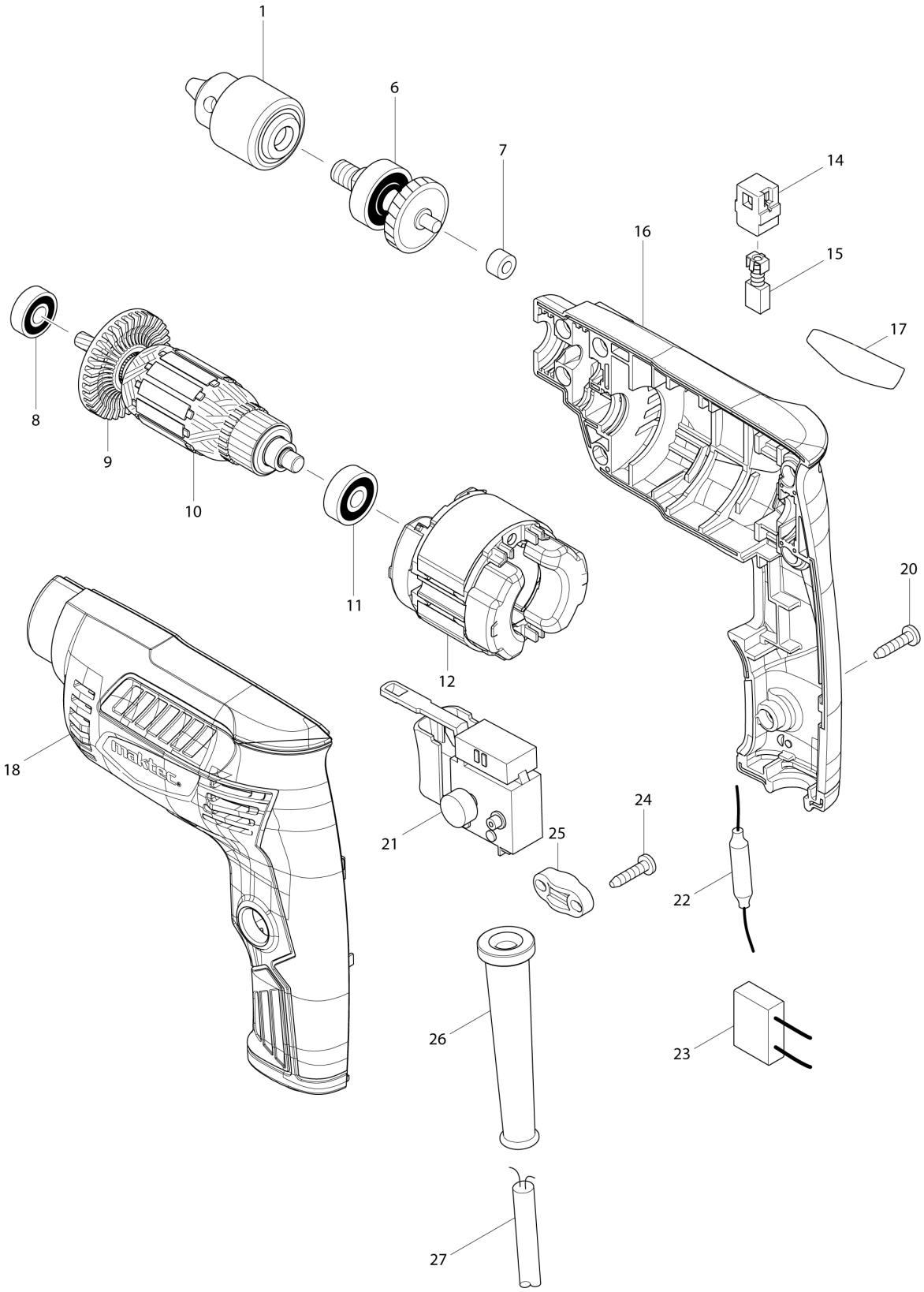

VN	VIETNAM

MT653 / 6.5MM HIGH SPEED DRILL

Item	Sub	Parts No.	Parts Description	Qty	I/C	E/C No.	Close No.	Remark
001		766021-9	DRILL CHUCK 6.5	1				
006		141951-9	GEAR COMPLETE	1				
007		214043-8	PLANE BEARING 5	1				
008		210062-2	BALL BEARING 607ZZ	1			B3273	
008-1		211382-7	BALL BEARING 607ZZ	1	O	B3273		
009		240142-0	FAN 44	1				
010		515878-3	ARMATURE ASS'Y 220V	1				
	D10		INC. 8,9,11					
011		210030-5	BALL BEARING 627ZZ	1			B2651	
011-1		210050-9	BALL BEARING 627ZZ	1	O	B2651		
012		633813-0	FIELD 220V	1			A7890	
012-1		633818-0	FIELD 220V	1	<	A7890		
014		643566-3	BRUSH HOLDER 5X8	2				
015		B-80282	CARBON BRUSH SET CB-85A	1				
016		187553-7	HOUSING SET	1			B5718	
	D10		INC. 18				B5718	
016-1		183F69-6	HOUSING SET	1	O	B5718		
	D10		INC. 18			B5718		
017		814F44-8	MT653 NAME PLATE	1				
018		187553-7	HOUSING SET	1			B5718	
	D10		INC. 16				B5718	
018-1		183F69-6	HOUSING SET	1	O	B5718		
	D10		INC. 16			B5718		
020		266326-2	TAPPING SCREW 4X18	7			C0991	
020-1		265652-6	TAPPING SCREW 4X18	7	O	C0991		
021		650551-9	SWITCH FA1-3/2BEZ-4	1				
022		646172-3	CHOKE COIL	1		A7890		
023		645218-2	NOISE SUPPRESSOR	1		A7890		
024		266326-2	TAPPING SCREW 4X18	2			C0991	
024-1		265652-6	TAPPING SCREW 4X18	2	O	C0991		
025		687124-5	STRAIN RELIEF	1				
026		682569-2	CORD GUARD 8-85	1				
027		691284-7	POWER SUPPLY CORD 0.75-2-2.0	1				
A01		418198-3	KEY HOLDER 9	1				
A02		763449-2	CHUCK KEY S6	1				
E01		688164-6	LINE FILTER	1		A7890		

Interchange
O : Yes
X : No
< : the new part can be substituted for the current.
> : the current part can be substituted for the new.
S : Interchangeable as a set.