VN	VIETNAM

Diagram / Parts List

MT652

6.5MM HIGH SPEED DRILL

2021/01

(VN) MT652 / 6.5MM HIGH SPEED DRILL

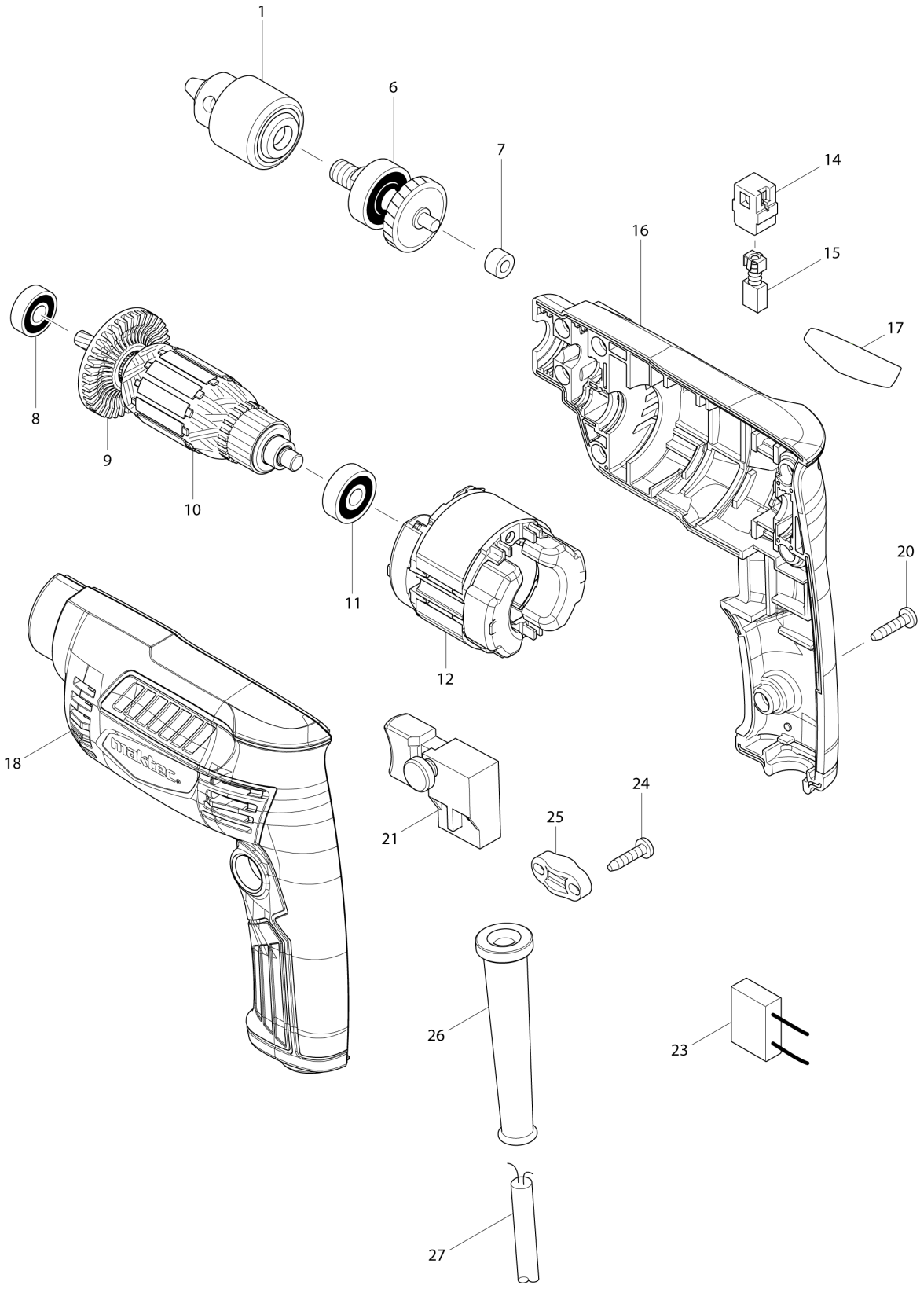

VN	VIETNAM

MT652 / 6.5MM HIGH SPEED DRILL

Item	Sub	Parts No.	Parts Description	Qty	I/C	E/C No.	Close No.	Remark
001		766021-9	DRILL CHUCK 6.5	1				
006		141950-1	GEAR COMPLETE	1				
007		214043-8	PLANE BEARING 5	1				
008		210062-2	BALL BEARING 607ZZ	1			B3273	
008-1		211382-7	BALL BEARING 607ZZ	1	O	B3273		
009		240142-0	FAN 44	1				
010		515873-3	ARMATURE ASS'Y 220V	1				
	D10		INC. 8,9,11					
011		210030-5	BALL BEARING 627ZZ	1			B2651	
011-1		210050-9	BALL BEARING 627ZZ	1	O	B2651		
012		593808-4	FIELD ASS'Y 220V	1			B1644	
	C10	654037-5	INSULATED TERM. FT1.25-M3	2			B1644	
012-1		590056-6	FIELD ASS'Y 220V	1	O	B1644		
	C10	654409-4	TERMINAL VR1.25-3.5LB	2	O	B1644		
014		643566-3	BRUSH HOLDER 5X8	2				
015		B-80254	CARBON BRUSH SET CB-64A	1				
016		187552-9	HOUSING SET	1				
	D10		INC. 18					
017		814F31-7	MT652 NAME PLATE	1				
018		187552-9	HOUSING SET	1				
	D10		INC. 16					
020		266326-2	TAPPING SCREW 4X18	7			C0991	
020-1		265652-6	TAPPING SCREW 4X18	7	O	C0991		
021		650235-9	SWITCH FA1-6/1B-3	1				
023		645185-1	NOISE SUPPRESSOR	1		A7890		
024		266326-2	TAPPING SCREW 4X18	2			C0991	
024-1		265652-6	TAPPING SCREW 4X18	2	O	C0991		
025		687124-5	STRAIN RELIEF	1				
026		682569-2	CORD GUARD 8-85	1				
027		691284-7	POWER SUPPLY CORD 0.75-2-2.0	1				
A01		418198-3	KEY HOLDER 9	1				
A02		763449-2	CHUCK KEY S6	1				

Interchange
O : Yes
X : No
< : the new part can be substituted for the current.
> : the current part can be substituted for the new.
S : Interchangeable as a set.