VN	VIETNAM

Diagram / Parts List

MT60

10MM DRILL

2021/01

(VN) MT60 / 10MM DRILL

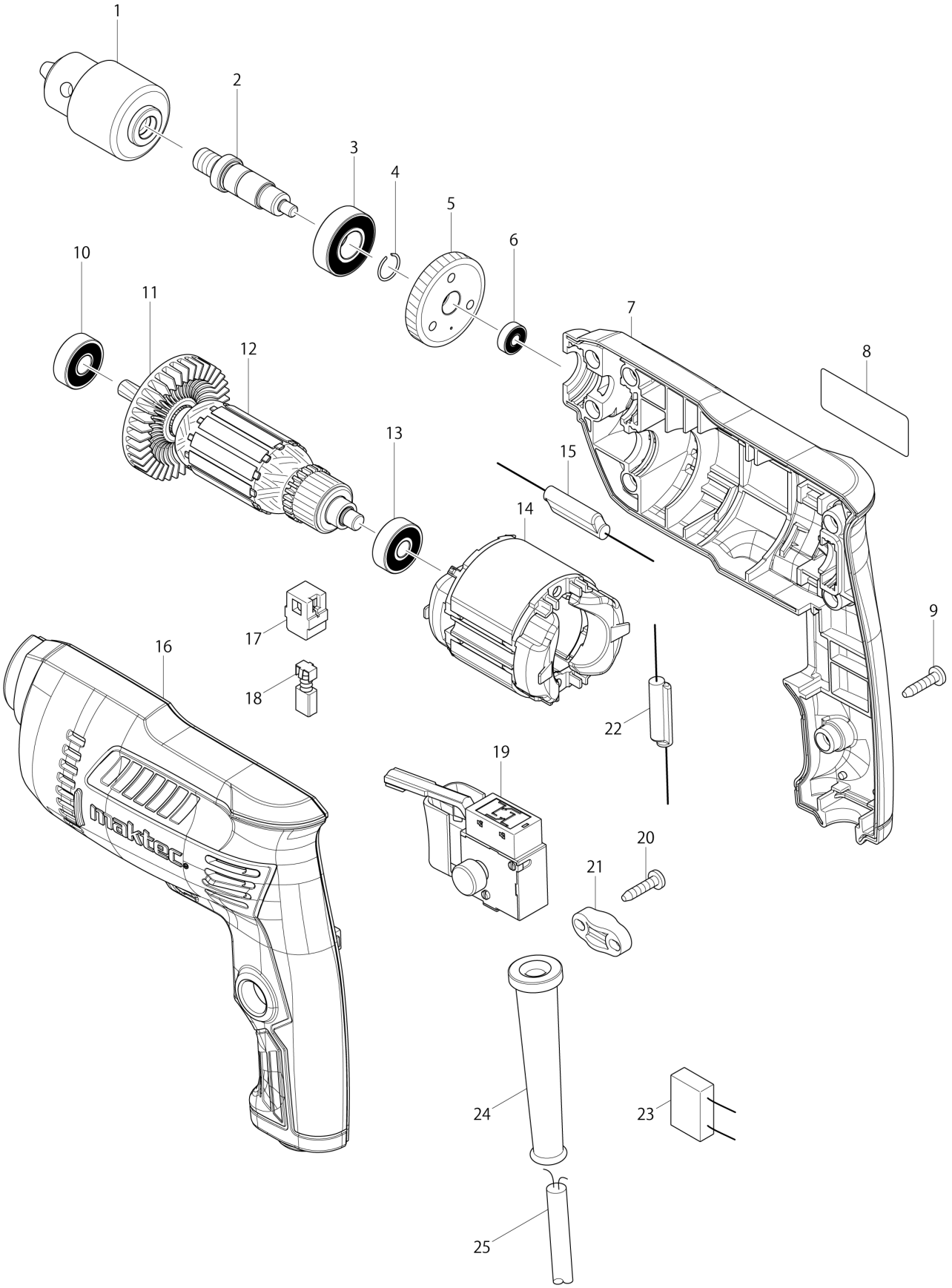

VN	VIETNAM

MT60 / 10MM DRILL

Item	Sub	Parts No.	Parts Description	Qty	I/C	E/C No.	Close No.	Remark
001		766014-6	DRILL CHUCK S10	1				
002		326025-9	SPINDLE	1				
003		210119-9	BALL BEARING 6001ZZ	1				
004		233950-6	RING SPRING 11	1				
005		227742-3	HELICAL GEAR 35	1				
006		210137-7	BALL BEARING 606ZZ	1				
007		187027-8	HOUSING SET	1				
	D10		INC. 16					
008		869345-3	MT60 NAME PLATE	1			D6632	
008-1		869345-3	MT60 NAME PLATE	1	O	D6632	D7415	
008-2		869345-3	MT60 NAME PLATE	1	O	D7415		
009		266326-2	TAPPING SCREW 4X18	7			C0991	
009-1		265652-6	TAPPING SCREW 4X18	7	O	C0991		
010		210046-0	BALL BEARING 608ZZ	1				
011		240127-6	FAN 52	1				
012		515833-5	ARMATURE ASS'Y 220V	1				
	D10		INC. 10,11,13					
013		210050-9	BALL BEARING 627ZZ	1				
014		633758-2	FIELD 220V	1			A2705	
014-1		633843-1	FIELD 220V	1	O	A2705	B5409	
014-2		633988-5	FIELD	1	O	B5409		
015		646153-7	CHOKE COIL	1		A7404	B0969	
015-1		646230-5	CHOKE COIL	1	O	B0969	C6891	
015-2		646153-7	CHOKE COIL	1	O	C6891		
016		187027-8	HOUSING SET	1				
	D10		INC. 7					
017		643566-3	BRUSH HOLDER 5X8	2				
018		B-80254	CARBON BRUSH SET CB-64A	1				
019-1		650240-6	SWITCH FA2-4/1BEK	1				
020		266326-2	TAPPING SCREW 4X18	2			C0991	
020-1		265652-6	TAPPING SCREW 4X18	2	O	C0991		
021		687124-5	STRAIN RELIEF	1				
022		646147-2	CHOKE COIL	1		A7404	B0969	
022-1		646231-3	CHOKE COIL	1	O	B0969	C6891	
022-2		646147-2	CHOKE COIL	1	O	C6891		
023		645273-4	NOISE SUPPRESSOR	1		A7404	C6891	
023-1		645190-8	NOISE SUPPRESSOR	1	O	C6891		
024		682569-2	CORD GUARD 8-85	1			A4450	
024-1		682582-0	CORD GUARD	1	S	A4450		
025		691284-7	POWER SUPPLY CORD 0.75-2-2.0	1				
A01		763447-6	CHUCK KEY S10	1				
A02		418163-2	KEY HOLDER 10	1			A4450	

Interchange
O : Yes
X : No
< : the new part can be substituted for the current.
> : the current part can be substituted for the new.
S : Interchangeable as a set.