VN	VIETNAM

Diagram / Parts List

M6600

MIXER

2021/05

(VN) M6600 / MIXER

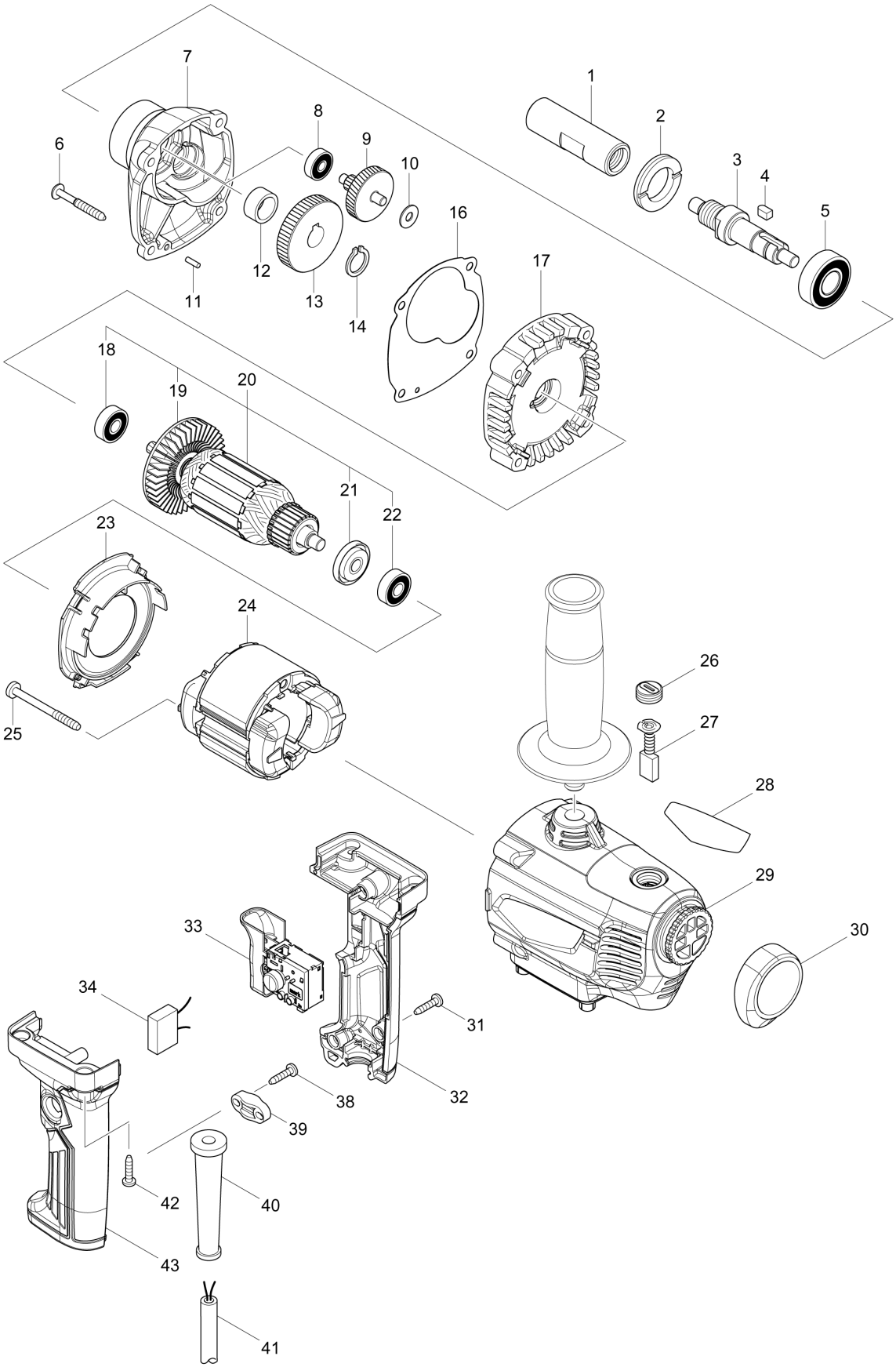

VN	VIETNAM

M6600 / MIXER

Item	Sub	Parts No.	Parts Description	Qty	I/C	E/C No.	Close No.	Remark
001		324265-3	SHAFT HOLDER 5/8-M12	1			D5930	
001-1		324265-3	SHAFT HOLDER 5/8-M12	1	<	D5930		
002		285848-3	BEARING RETAINER 23-36	1				
003		326439-2	SPINDLE	1				
004		254211-1	KEY 5	1				
005		211487-3	BALL BEARING 6202DDW	1				
006		266211-9	TAPPING SCREW 5X40	4				
007		142841-9	GEAR HOUSING COMPLETE	1				
	C10	263002-9	RUBBER PIN 4	1				
008		211499-6	BALL BEARING 626ZZ	1				
009		226028-2	GEAR COMPLETE 7-41	1				
010		253804-1	FLAT WASHER 6	1				
011		256180-2	PIN 3	1				
012		257018-4	RING 15	1			D9218	
012-1		257018-4	RING 15	1	O	D9218		
013		221261-1	SPUR GEAR 47	1				
014		961054-1	RETAINING RING S-14	1				
016		442207-6	GASKET	1				
017		142840-1	GEAR HOUSING COVER COMPLETE	1				
	C10	263002-9	RUBBER PIN 4	1				
018		210029-0	BALL BEARING 608ZZ	1				
019		241850-6	FAN 60	1				
020		513913-1	ARMATURE ASS'Y 220V	1				
	D10		INC. 18,19,21,22					
021		681644-1	INSULATION WASHER	1				
022		210029-0	BALL BEARING 608ZZ	1				
023		455343-9	BAFFLE PLATE	1				
024		594653-0	FIELD ASS'Y 220V	1				
	C10	654020-2	RING TERMINAL	2				
	C21	654485-8	PARALLEL SPLICE	2				
025		266418-7	TAPPING SCREW 5X55	2				
026-1		643750-0	BRUSH HOLDER CAP 7-11	2				
027		B-80379	CARBON BRUSH SET CB-303A	1				
028		850V85-6	M6600 NAME PLATE	1				
029		143260-2	MOTOR HOUSING COMPLETE	1				
	C10	644501-4	BRUSH HOLDER 5X11	2				
030		424654-3	CAP	1				
031		266326-2	TAPPING SCREW 4X18	3				
032-1		183B04-0	SWITCH HANDLE SET	1				
	D10		INC. 43					
033		650714-7	SWITCH TN04-6/1BEK	1				
034		645190-8	NOISE SUPPRESSOR	1				
038		266326-2	TAPPING SCREW 4X18	2				
039		687124-5	STRAIN RELIEF	1				
040		682569-2	CORD GUARD 8-85	1				
041		691284-7	POWER SUPPLY CORD 0.75-2-2.0	1				
042		266326-2	TAPPING SCREW 4X18	4				
043-1		183B04-0	SWITCH HANDLE SET	1				
	D10		INC. 32					
A01		142088-5	GRIP 36 COMPLETE	1				
A02		165757-1	MIXING BLADE 165	1				
A03		265220-5	HEX. BOLT M8X18	1				
A04		168349-5	SHAFT COMPLETE	1				
A05		781006-4	WRENCH 13	1				
A06		781010-3	WRENCH 19	2				

Interchange
O : Yes
X : No
< : the new part can be substituted for the current.
> : the current part can be substituted for the new.
S : Interchangeable as a set.