VN	VIETNAM

Diagram / Parts List

M0401

110MM CUTTER

2021/01

(VN) M0401 / 110MM CUTTER

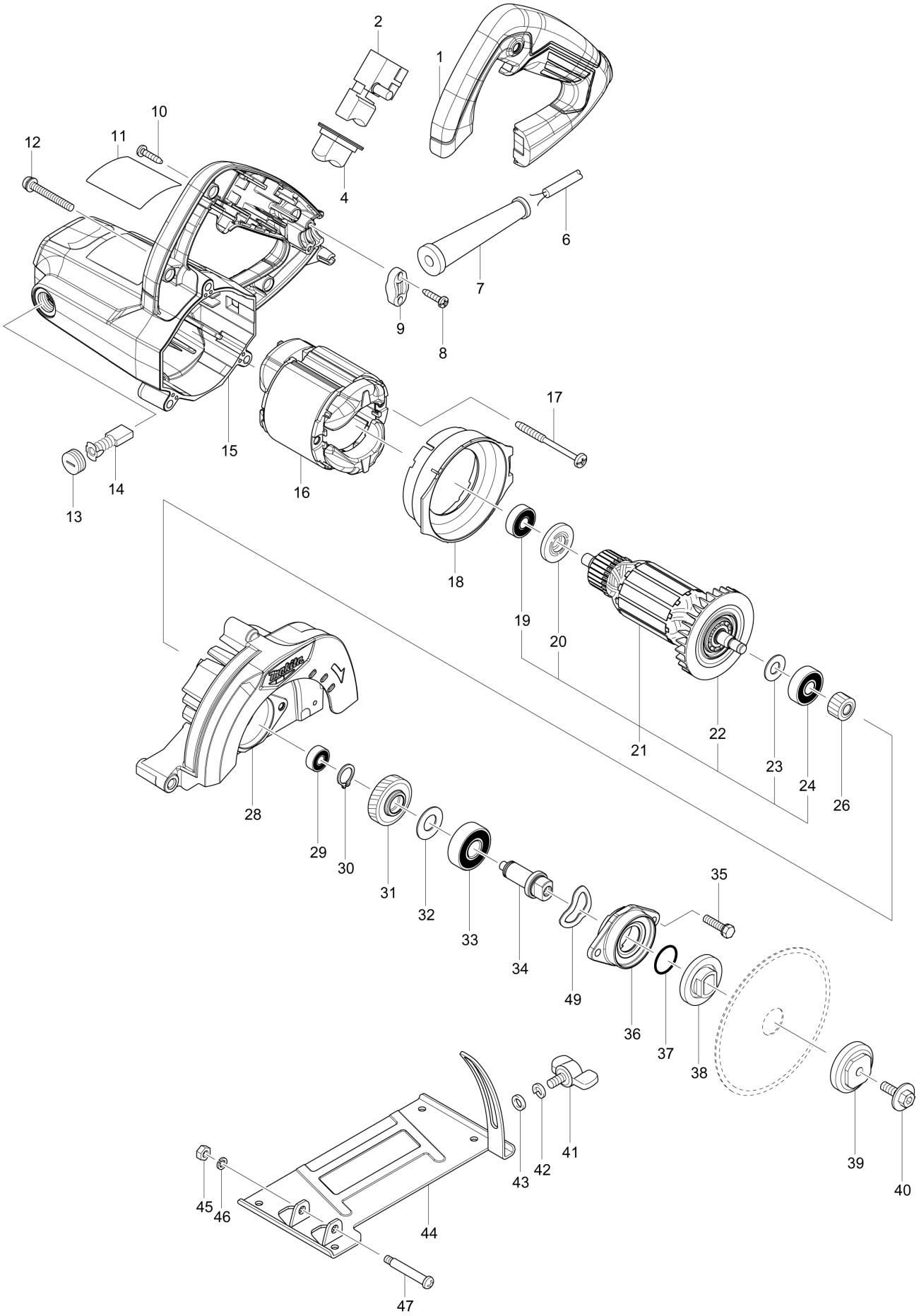

VN	VIETNAM

M0401 / 110MM CUTTER

Item	Sub	Parts No.	Parts Description	Qty	I/C	E/C No.	Close No.	Remark
001		457084-3	HANDLE COVER	1				
002		650246-4	SWITCH TN14-3-C01-1	1				
004		421812-2	DUST COVER	1				
006		691284-7	POWER SUPPLY CORD 0.75-2-2.0	1				
007		682583-8	CORD GUARD	1				
008		266841-6	TAPPING SCREW 4X18	2				
009		687124-5	STRAIN RELIEF	1				
010		266841-6	TAPPING SCREW 4X18	4				
011		852P00-0	M0401 NAME PLATE	1				
012		265104-7	PAN HEAD SCREW M5X40	3				
013-1		643750-0	BRUSH HOLDER CAP 7-11	2				
014		B-80379	CARBON BRUSH SET CB-303A	1				
015		144064-5	MOTOR HOUSING COMPLETE	1				
	C10	644501-4	BRUSH HOLDER 5X11	1				
016-1		593953-5	FIELD ASS'Y 220V	1				
	C10	654449-2	RING TERMINAL	2				
	C20	654485-8	PARALLEL SPLICE	2				
017		266826-2	TAPPING SCREW 5X60	2				
018		454369-8	BAFFLE PLATE	1				
019		210046-0	BALL BEARING 608ZZ	1				
020		681644-1	INSULATION WASHER	1				
021		513878-7	ARMATURE ASS'Y 220V	1				
	D10		INC. 19,20,22-24					
022		240053-9	FAN 65	1				
023		267231-6	FLAT WASHER 9	1				
024		211488-1	BALL BEARING 629DDW	1				
026		227762-7	HELICAL GEAR 14	1				
028		144063-7	BLADE CASE COMPLETE	1				
029		210137-7	BALL BEARING 606ZZ	1				
030		257993-4	RETAINING RING (EXT) S-12	1				
031		227763-5	HELICAL GEAR 32	1				
032		267238-2	FLAT WASHER 12	1				
033		211345-3	BALL BEARING 6201DDW	1				
034		326561-5	SPINDLE	1				
035		265497-2	+ HEX. BOLT M5X20	2				
036		319254-1	BEARING BOX	1				
037		213279-6	O RING 18	1				
038		224080-4	INNER FLANGE 36	1				
039		224081-2	OUTER FLANGE 36	1				
040		266510-9	HEX. SOCKET HEX. BOLT M6X18	1				
041		265754-8	THUMB SCREW M6X12	1				
042-1		253428-3	SPRING WASHER 6	1			D1189	
043		941151-9	FLAT WASHER 6	1				
044		346674-6	BASE	1				
045		252137-1	HEX. NUT M5-8	1				
046-1		253427-5	SPRING WASHER 5	1				
047		265091-0	+ PAN HEAD SCREW M5	1				
049		267785-3	WAVE WASHER 23	1				
A01		265142-9	+ PAN HEAD SCREW M4X10	1				
A02		346675-4	TUBE HOLDER	1				
A03		412137-5	VINYL TUBE 5	1				
A04		781041-2	WRENCH 22	1				
A05		783217-7	HEX. WRENCH 5	1				

Interchange
O : Yes
X : No
< : the new part can be substituted for the current.
> : the current part can be substituted for the new.
S : Interchangeable as a set.