VN	VIETNAM

Diagram / Parts List

GS5000

125MM STRAIGHT GRINDER

2021/01

(VN) GS5000 / 125MM STRAIGHT GRINDER

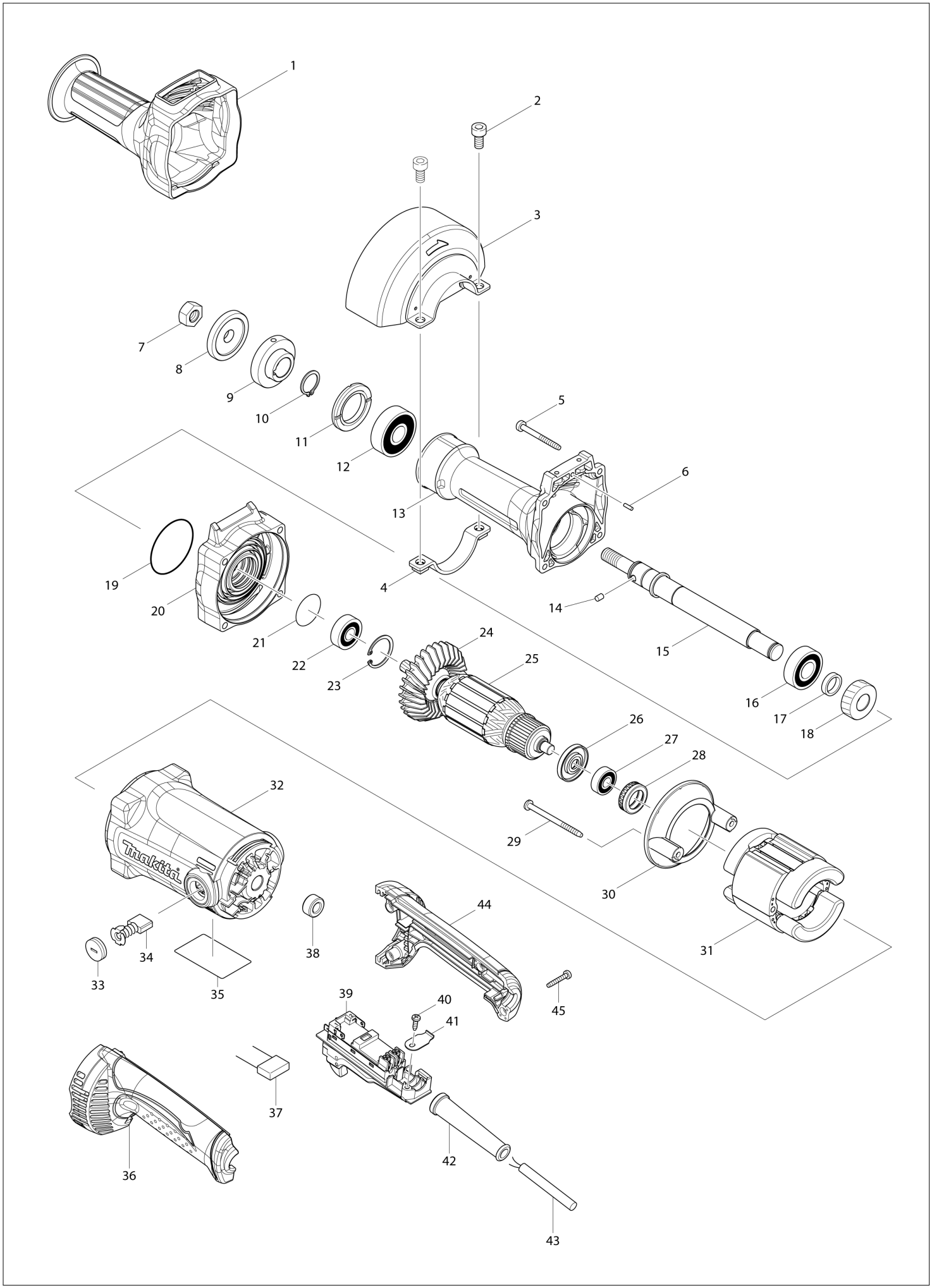

VN	VIETNAM

GS5000 / 125MM STRAIGHT GRINDER

Item	Sub	Parts No.	Parts Description	Qty	I/C	E/C No.	Close No.	Remark
001		424549-0	INSULATION COVER	1				
002		922422-3	HEX. SOCKET HEAD BOLT M8X16	2				
003		165714-9	WHEEL COVER 125	1				
004		346656-8	TIGHT BAND	1				
005		266046-8	TAPPING SCREW 5X50	4				
006		256180-2	PIN 3	1				
007		252007-4	HEX. NUT W1/2-21	1				
008		224019-7	OUTER FLANGE 50	1				
009		224457-3	INNER FLANGE 50	1				
010		961060-6	RETAINING RING S-20	1				
011		285824-7	BEARING RETAINER 31-48	1				
012		211306-3	BALL BEARING 6204LLB	1				
013		318961-3	GEAR HOUSING	1				
014		268161-4	PIN 5	1				
015		326251-0	SPINDLE B	1				
016		211256-2	BALL BEARING 6203LLB	1				
017		257253-4	RING 17	1				
018		227766-9	HELICAL GEAR 47	1				
019		213656-2	O RING 53	1				
020		318962-1	GEAR HOUSING COVER	1				
021		213487-9	O RING 31	1				
022		211129-9	BALL BEARING 6201DDW	1				
023		962151-6	RETAINING RING R-32	1				
024		240143-8	FAN 80	1				
025		517888-6	ARMATURE ASS'Y 220V	1				
	D10		INC. 24,26,27					
026		681657-2	INSULATION WASHER	1				
027		210059-1	BALL BEARING 6000DDW	1				
028		421490-8	RUBBER RING 26	1				
029		266038-7	TAPPING SCREW 5X70	2				
030		451480-7	BAFFLE PLATE	1				
031		523423-0	FIELD ASSY 220V	1				
	C10	654098-5	RECEPTACLE	2				
032		140222-1	MOTOR HOUSING COMPLETE	1				
	C10	643707-1	BRUSH HOLDER	2				
033		643700-5	BRUSH HOLDER CAP 7-18	2				
034		B-80357	CARBON BRUSH SET CB-204A	1				
035		814H98-7	GS5000 NAME PLATE	1				
036		188848-1	HANDLE SET	1				
	D10		INC. 44					
039		650101-0	SWITCH TG08-1100-011	1				
040		266192-7	TAPPING SCREW 4X14	1				
041		687169-3	STRAIN RELIEF	1				
042		682505-8	CORD GUARD 10-90	1				
043		691015-4	POWER SUPPLY CORD 0.75-2-2.5	1				
044		188848-1	HANDLE SET	1				
	D10		INC. 36					
045		265999-8	TAPPING SCREW 4X25	4				
A01		410047-0	WRENCH HOLDER 5.6	1				
A02		781029-2	WRENCH 21	1				
A03		783204-6	HEX. WRENCH 6	1				

Interchange
O : Yes
X : No
< : the new part can be substituted for the current.
> : the current part can be substituted for the new.
S : Interchangeable as a set.