VN	VIETNAM

Diagram / Parts List

GD0602

DIE GRINDER

2021/08

(VN) GD0602 / DIE GRINDER

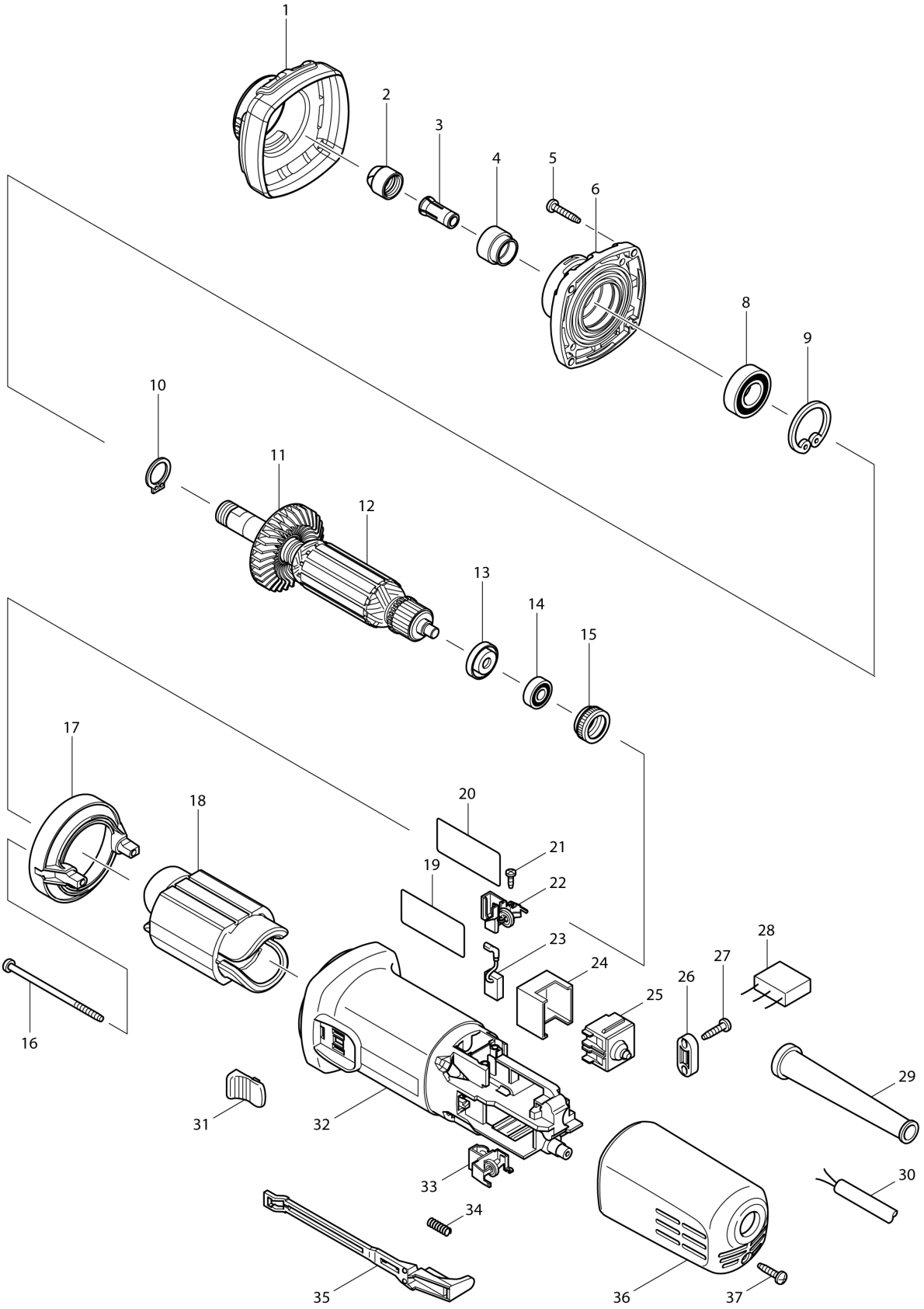

VN	VIETNAM

GD0602 / DIE GRINDER

Item	Sub	Parts No.	Parts Description	Qty	I/C	E/C No.	Close No.	Remark
001		424164-0	INSULATION COVER	1				
002		763668-0	COLLET NUT	1				
003		763670-3	COLLET CONE 6	1				
004		324995-6	BUSH 15	1				
005		266324-6	TAPPING SCREW 4X22	4				
006		140091-0	BEARING BOX COMPLETE	1				
008		211237-6	BALL BEARING 6002LLB	1				
009		962151-6	RETAINING RING R-32	1				
010		961055-9	RETAINING RING S-15	1				
011		240111-1	FAN 56	1				
012		515743-6	ARMATURE ASS'Y 220V	1				
	D10		INC. 11,13,14					
013		681636-0	INSULATION WASHER	1				
014		210034-7	BALL BEARING 607LLB	1				
015		421868-5	LABYRINTH RUBBER RING 19	1				
016		266345-8	TAPPING SCREW 4X80	2				
017		418770-1	BAFFLE PLATE	1			B9212	
017-1		457791-8	BAFFLE PLATE	1	<	B9212		
018		621723-3	FIELD 220-240V	1				
019		866084-6	GD0602 NAME PLATE	1				
020		819329-1	CLEAR LABEL	1			88975	
020-1		892295-7	CLEAR LABEL	1	<	88975		
021		266007-8	TAPPING SCREW BIND PT 3X10	4				
022		643760-7	BRUSH HOLDER	1				
023		194074-2	CARBON BRUSH CB-325	1			85070	
023-1		195001-2	CARBON BRUSH SET CB-325	1	<	85070		
024		418729-8	SPACER	1				
025		650560-8	SWITCH DPX-2110-R	1			93182	
025-1		651947-7	SWITCH 1247.0302	1	O	93182		
026		687140-7	STRAIN RELIEF	1				
027		266326-2	TAPPING SCREW 4X18	2				
029		682566-8	CORD GUARD 10	1				
030		691015-4	POWER SUPPLY CORD 0.75-2-2.5	1				
031		419566-3	SWITCH KNOB	1				
032		418725-6	MOTOR HOUSING	1				
033		643760-7	BRUSH HOLDER	1				
034		233121-5	COMPRESSION SPRING 4	1				
035		418728-0	SWITCH LEVER B	1				
036		418726-4	REAR COVER	1			DB072	
036-1		413A32-8	REAR COVER	1	<	DB072		
037		266326-2	TAPPING SCREW 4X18	1				
A01		781039-9	WRENCH 13	2				

Interchange
O : Yes
X : No
< : the new part can be substituted for the current.
> : the current part can be substituted for the new.
S : Interchangeable as a set.