VN	VIETNAM

Diagram / Parts List

TD112D

CORDLESS IMPACT DRIVER

2021/07

(VN) TD112D / CORDLESS IMPACT DRIVER

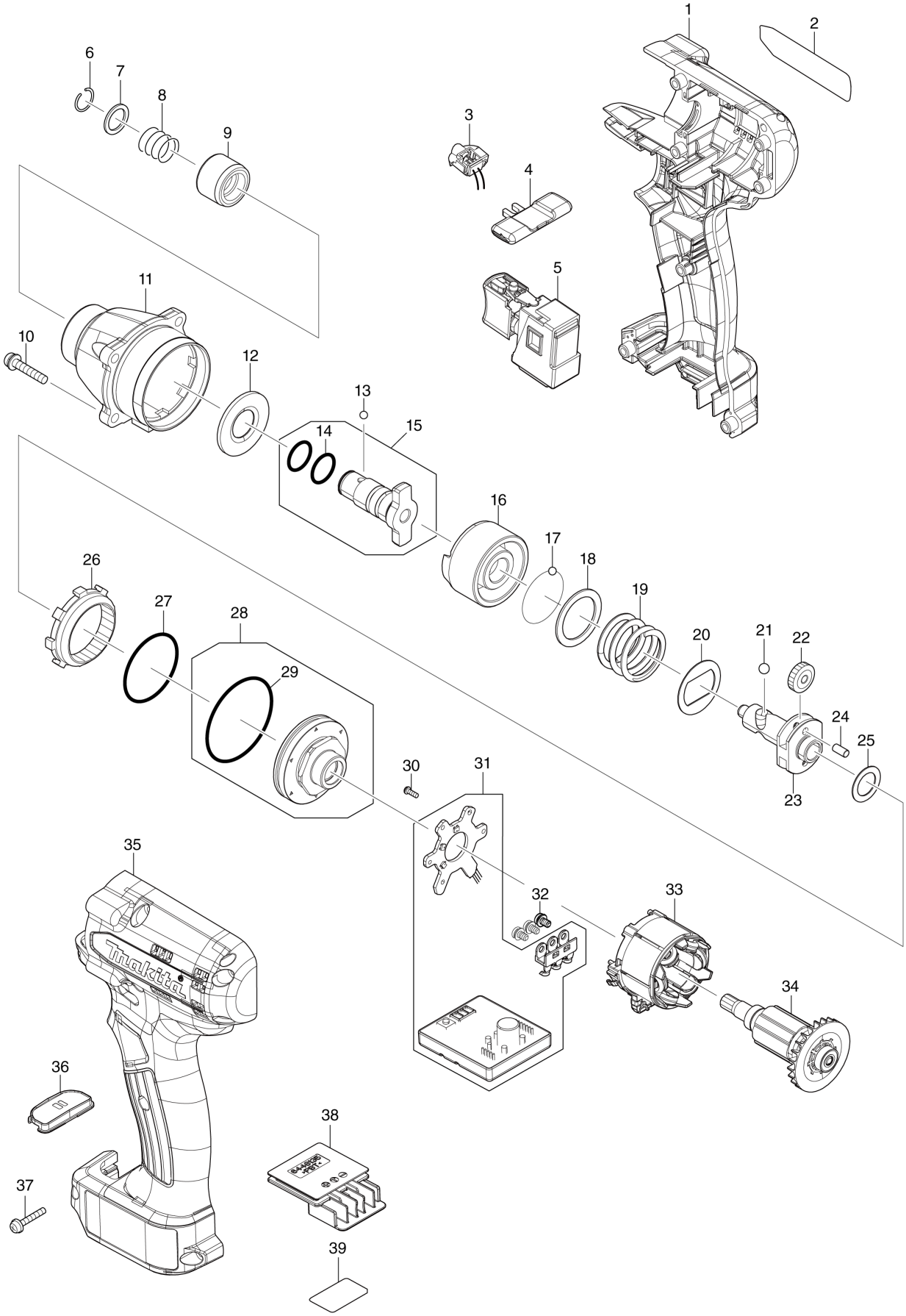

VN	VIETNAM

TD112D / CORDLESS IMPACT DRIVER

Item	Sub	Parts No.	Parts Description	Qty	I/C	E/C No.	Close No.	Remark
001		183T35-7	HOUSING SET	1				
	C10	931002-4	HEX. NUT M3	7				
	D10		INC. 35					
002		811U28-7	TD112D NAME PLATE	1				
003		620999-9	LED CIRCUIT	1				
004		455053-8	F/R CHANGE LEVER	1				
005		140L08-5	SWITCH COMPLETE	1				
	C10	422465-0	SWITCH COVER	1				
006		231951-8	RING SPRING 11	1				
007		267085-1	FLAT WASHER 12	1				
008		233005-7	COMPRESSION SPRING 13	1				
009		162257-2	SLEEVE	1				
010		265145-3	+ PAN HEAD SCREW M4X22	4				
011		141C02-6	HAMMER CASE COMPLETE	1				
012		261170-2	NYLON WASHER 14	1				
013		216001-0	STEEL BALL 3.5	2				
014		213118-0	O RING 12	2				
015		136501-3	ANVIL N ASSY	1				
	D10		INC. 14					
016		327821-8	HAMMER	1				
017		216019-1	STEEL BALL 3	25				
018		267352-4	FLAT WASHER 22	1				
019		232701-4	COMPRESSION SPRING 21	1				
020		267813-4	WASHER 21	1				
021		216002-8	STEEL BALL 4.8	2				
022		221437-0	SPUR GEAR 17	2				
023		327818-7	SPINDLE	1				
024		268217-3	PIN 3.5	2				
025		253052-2	FLAT WASHER 12	1				
026		227316-0	INTERNAL GEAR 43	1				
027		213479-8	O RING 33	1				
028		136499-4	BEARING BOX ASS'Y	1				
	D10		INC. 29					
029		213533-8	O-RING 39	1				
030		266490-9	TAPPING SCREW PT 2X6	3				
031		620F09-8	CONTROLLER	1				
032		652069-6	FLAT HEAD SCREW M3X6	3				
033		629A80-9	STATOR	1				
034		619415-6	ROTOR	1				
035		183T35-7	HOUSING SET	1				
	C10	931002-4	HEX. NUT M3	7				
	D10		INC. 1					
036		141C03-4	SWITCH PLATE COMPLETE	1				
	C10	8037R1-3	SWITCH LABEL	1				
037		265095-2	PAN HEAD SCREW M3X20	7				
038		644813-5	TERMINAL	1				
039		811U35-0	TD112D SERIAL NO. LABEL	1				

Interchange
O : Yes
X : No
< : the new part can be substituted for the current.
> : the current part can be substituted for the new.
S : Interchangeable as a set.