VN	VIETNAM

Diagram / Parts List

DUB185

CORDLESS BLOWER

2021/06

(VN) DUB185 / CORDLESS BLOWER

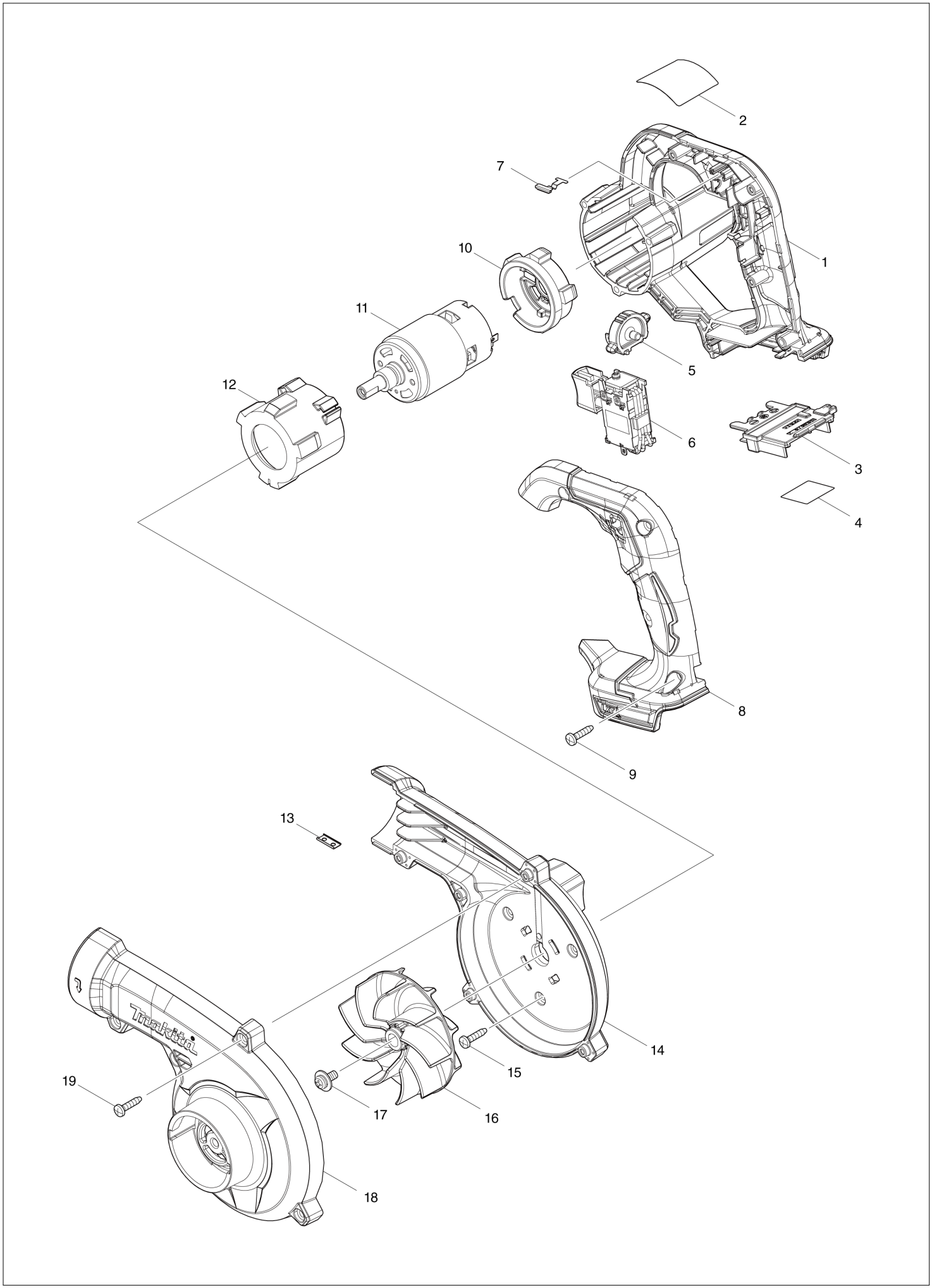

VN	VIETNAM

DUB185 / CORDLESS BLOWER

Item	Sub	Parts No.	Parts Description	Qty	I/C	E/C No.	Close No.	Remark
001		183P63-8	MOTOR HOUSING SET	1				
	D10		INC. 8					
002		856X26-2	DUB185 NAME PLATE	1				
003		643874-2	TERMINAL	1				
004		856X33-5	DUB185 SERIAL NO. LABEL	1				
005		412573-5	DIAL	1				
006		632P92-3	SWITCH UNIT	1			D4806	
006-1		632R68-2	SWITCH UNIT	1	<	D4806		
007		232620-4	LEAF SPRING	1				
008		183P63-8	MOTOR HOUSING SET	1				
	D10		INC. 1					
009		266326-2	TAPPING SCREW 4X18	5				
010		422589-2	MOTOR RUBBER RING B	1				
011		629484-9	DC MOTOR	1				
012		422588-4	MOTOR RUBBER RING A	1				
013		345998-7	SET PLATE	1				
014		140U56-8	FAN HOUSING COMPLETE	1				
	C10	8012T7-9	CAUTION LABEL	1				
015		266326-2	TAPPING SCREW 4X18	3				
016		240210-9	FAN 85	1				
017		265B25-5	PAN HEAD SCREW M5X12 WITH WG	1				
018		412572-7	FAN COVER	1				
019		266326-2	TAPPING SCREW 4X18	5				
A02		123245-4	NOZZLE ASS'Y	1				
	C10	454703-2	JOINT	1				
A03B		450128-8	BATTERY COVER	1				
A04B		***DC18RC	DC18RC FAST CHARGER	1				
	D10		COMPO-PARTS					
A05B		197280-8	BATTERY BL1850B SET	1				

B:DUB185RT(H)

Interchange
O : Yes
X : No
< : the new part can be substituted for the current.
> : the current part can be substituted for the new.
S : Interchangeable as a set.