VN	VIETNAM

Diagram / Parts List

DPV300

75MM CORDLESS SANDER POLISHER

2021/08

(VN) DPV300 / 75MM CORDLESS SANDER POLISHER

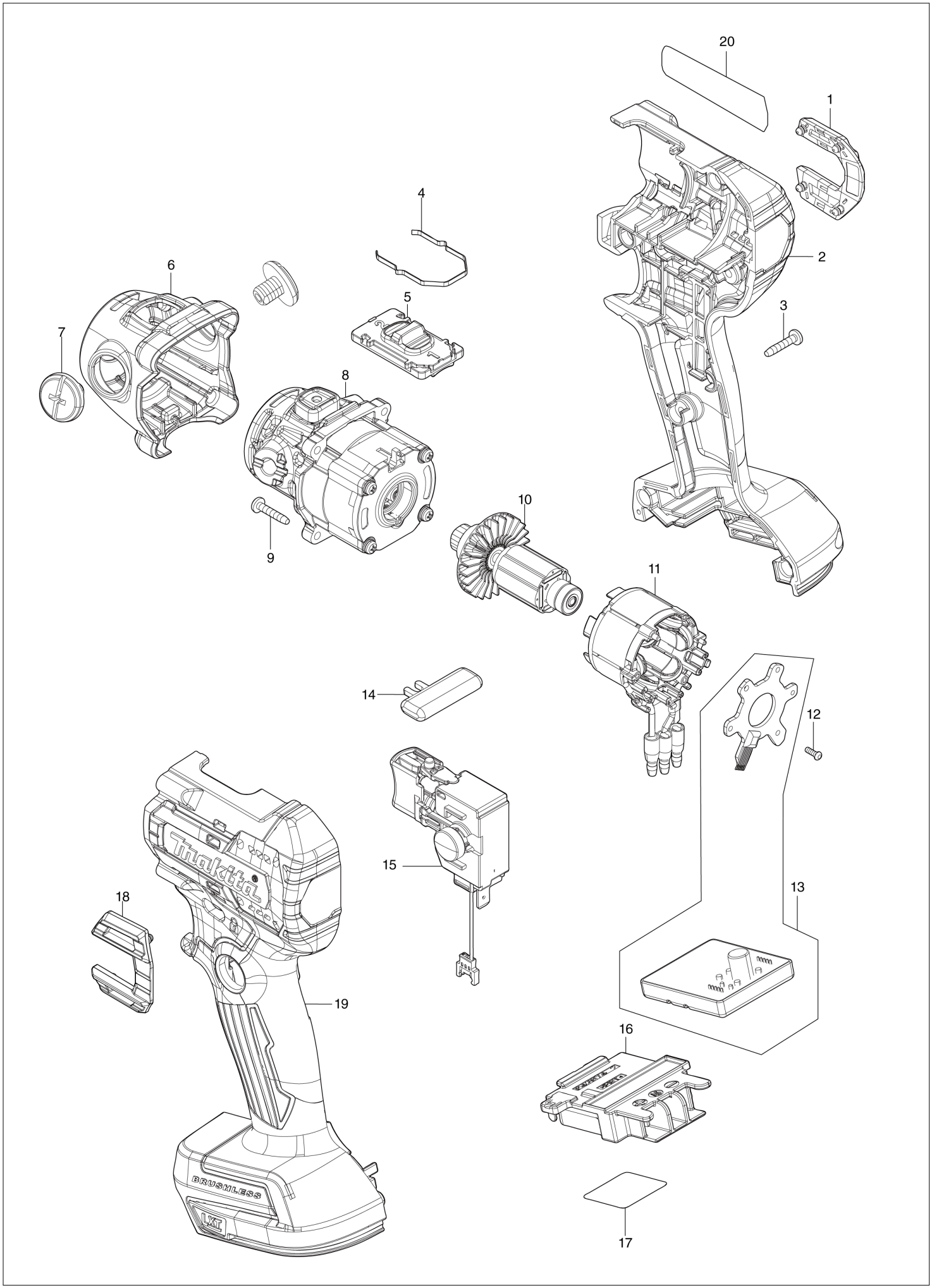

VN	VIETNAM

DPV300 / 75MM CORDLESS SANDER POLISHER

Item	Sub	Parts No.	Parts Description	Qty	I/C	E/C No.	Close No.	Remark
001		422613-1	DUST COVER	1				
002		191P12-1	HOUSING SET	1				
	C10	8028C3-7	INDICATION LABEL	1				
	C20	263005-3	RUBBER PIN 6	2				
	D10		INC. 19					
003		266130-9	TAPPING SCREW BIND PT 3X16	7				
004		232659-7	LEAF SPRING	1				
005		127720-2	SPEED CHANGE LEVER ASSEMBLY	1				
	C10	232636-9	COMPRESSION SPRING 3	2				
006		413228-5	HEAD COVER	1				
007		413229-3	+ROUND HEAD SCREW M8X10	2				
008		127721-0	GEAR ASSEMBLY	1				
009		266130-9	TAPPING SCREW BIND PT 3X16	4				
010		619663-7	ROTOR	1				
011		629A36-2	STATOR	1				
012		266490-9	TAPPING SCREW PT 2X6	3				
013		620D22-4	CONTROLLER	1				
014		412697-7	LOCK OFF BUTTON	1				
015		651489-1	SWITCH C3JW-4B-L6	1				
016		643874-2	TERMINAL	1				
017		858B92-3	DPV300 SERIAL NO. LABEL	1				
018		422613-1	DUST COVER	1				
019		191P12-1	HOUSING SET	1				
	C10	8028C3-7	INDICATION LABEL	1				
	C20	263005-3	RUBBER PIN 6	2				
	D10		INC. 2					
020		858B84-2	DPV300 NAME PLATE	1				
A01		140X75-2	GRIP 30 COMPLETE	1				
A02		191N90-9	SPONGE PAD 80 SET	1				
A03		191N91-7	SPONGE PAD 80 SET	1				
A04		191N92-5	WOOL PAD 80 SET	1				
A05		743124-6	PAD 50	1				
A06		743125-4	PAD 75	1				
A07		743126-2	ADAPTER	1				
A08B		821550-0	CONNECTOR PLASTIC CASE (TYPE2)	1				
	C10	453974-8	LATCH	4				
A09B		835V03-5	INNER TRAY	1				
A10B		8027Y3-5	DPV300RTJ PLASTIC CASE LABEL	2				
A11B		8027Y2-7	DPV300RTJ INDICATION LABEL	1				
A12B		197280-8	BATTERY BL1850B SET	2				
A13B		450128-8	BATTERY COVER	1				
A14B		***DC18RC	DC18RC FAST CHARGER	1				
	D10		COMPO-PARTS					
A16		781006-4	WRENCH 13	1		DC555		

B:DPV300RTJ(H)

Interchange
O : Yes
X : No
< : the new part can be substituted for the current.
> : the current part can be substituted for the new.
S : Interchangeable as a set.