VN	VIETNAM

Diagram / Parts List

DMR203

CORDLESS JOB SITE SPEAKER

2021/01

(VN) DMR203 / CORDLESS JOB SITE SPEAKER

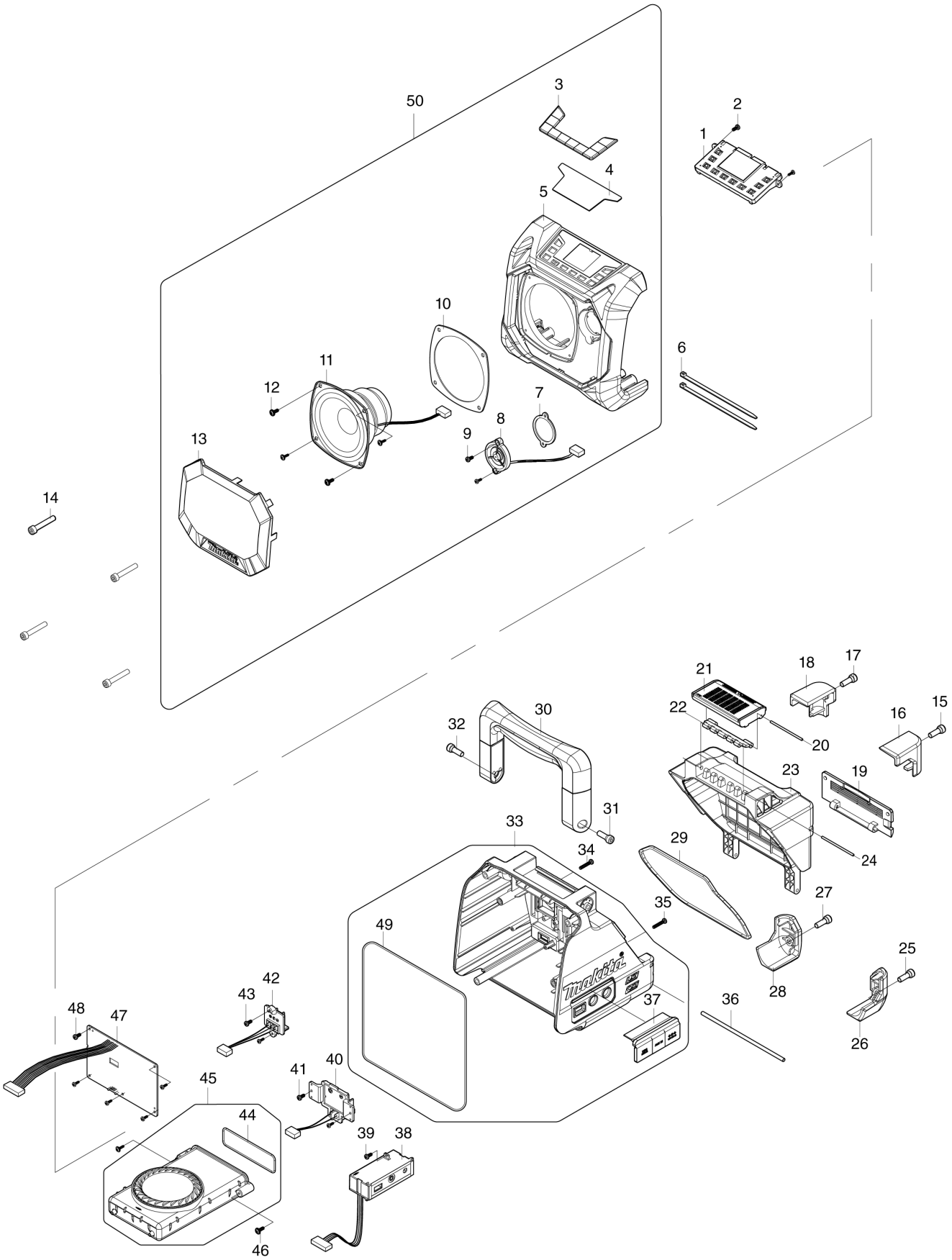

VN	VIETNAM

DMR203 / CORDLESS JOB SITE SPEAKER

Item	Sub	Parts No.	Parts Description	Qty	I/C	E/C No.	Close No.	Remark
001		SE00000796	PCB C ASS'Y	1				
002		SE00000521	SCREW PTB 3X8(ZK) 29S16308001	2				
003		SE00000797	RUBBER KEY	1				
004		SE00000798	DISPLAY PLATE	1				
005		SE00000799	FRONT CABINET(BLUE)	1				
006		SE00000195	W/TIES 100MM	2				
007		SE00000801	SPEAKER PACKING B	1				
008		SE00000802	TWEETER SPEAKER ASS'Y	1				
009		SE00000521	SCREW PTB 3X8(ZK) 29S16308001	2				
010		SE00000803	SPEAKER PACKING A	1				
011		SE00000804	MAIN SPEAKER ASS'Y	1				
012		SE00000557	SCREW PTPW 3X10(ZK) 29S1531000	4				
013		SE00000805	SPEAKER GRILL ASS'Y	1				
014		SE00000530	SCREW PTHE 6X37(CR) 29S1793701	4				
015		SE09176166	HEX SCREW M6X16	1				
016		SE00000531	BATTERY BUMPER R 3163B30000010	1				
017		SE09176166	HEX SCREW M6X16	1				
018		SE00000532	BATTERY BUMPER L 3162B30000010	1				
019		SE00000534	PHONE COVER ASS'Y 011B3A5	1				
020		SE00000533	PIN D2X88 2100B300100	1				
021		SE00000535	LOCKER COVER 3121B30000010	1				
022		SE00000536	LOCKER HINGE 3300B30000010	1				
023		SE00000537	BATTERY COVER (BLUE) 3120B3000	1				
024		SE00000539	PIN D2X77 2100B300200	1				
025		SE09176166	HEX SCREW M6X16	1				
026		SE00000541	REAR BUMPER R 3161B30000010	1				
027		SE09176166	HEX SCREW M6X16	1				
028		SE00000540	REAR BUMPER L 3160B30000010	1				
029		SE00000542	BATTERY PACKING 2400B300200	1				
030		SE00000543	HANDLE ASS'Y-BLUE 01HB3A1	1				
031		SE09176166	HEX SCREW M6X16	1				
032		SE09176166	HEX SCREW M6X16	1				
033		SE00000808	REAR CABINET ASS'Y(BLUE)	1				
	D10		INC. 37,49					
034		SE00000548	SCREW PTB 3X20(ZK) 29S09990047	1				
035		SE00000548	SCREW PTB 3X20(ZK) 29S09990047	1				
036		SE00000549	BATTERY COVER FIXER PIN 2100b3	1				
037		SE00000810	JACK RUBBER COVER	1				
038		SE00000654	JACK HOLDER ASS'Y-BLUE 011 AA3	1				
039		SE00000521	SCREW PTB 3X8(ZK) 29S16308001	1				
040		SE00000652	TERMINAL D ASSY 011 AA2	1				
041		SE00000521	SCREW PTB 3X8(ZK) 29S16308001	2				
042		SE00000651	TERMINAL 10.8V ASSY 011 AA1	1				
043		SE00000521	SCREW PTB 3X8(ZK) 29S16308001	2				
044		SE00000556	PHONE CASE PACKING 2400B300400	1				
045		SE00000555	MOBILE-PHONE-CASE ASS'Y 011B3A	1				
	D10		INC. 44					
046		SE00000557	SCREW PTPW 3X10(ZK) 29S1531000	2				
047		SE00000812	PCB A ASS'Y	1				
048		SE00000521	SCREW PTB 3X8(ZK) 29S16308001	5				
049		SE024PC040	PACKING	1				
050		SE00000806	FRONT CABINET ASS'Y(BLUE)	1				
	D10		INC. 3-5,7-13					
A01		SE00000792	AC ADAPTER (CE)	1				

Interchange
O : Yes
X : No
< : the new part can be substituted for the current.
> : the current part can be substituted for the new.
S : Interchangeable as a set.