VN	VIETNAM

Diagram / Parts List

DMP180

CORDLESS INFLATOR

2021/01

(VN) DMP180 / CORDLESS INFLATOR

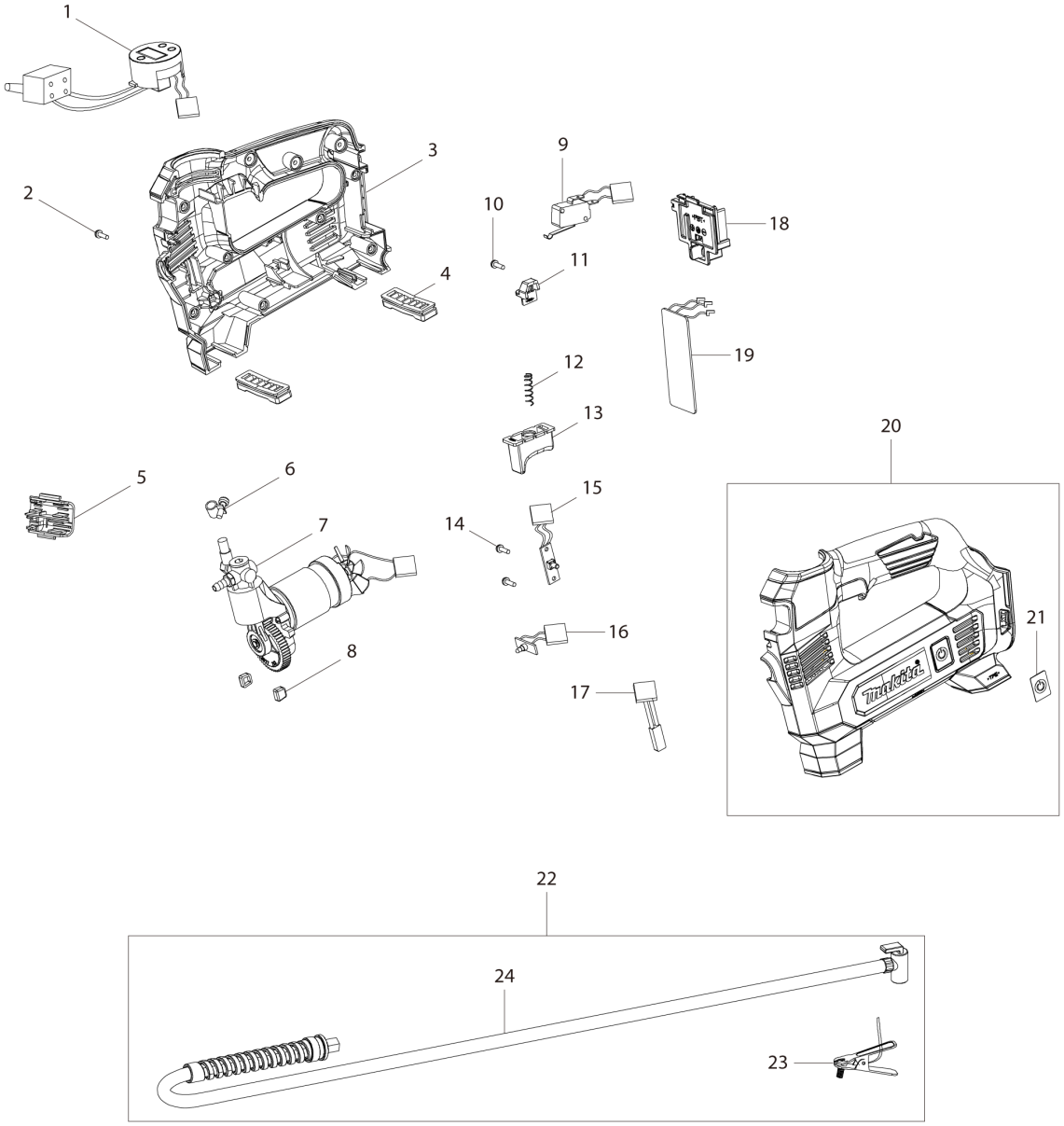

VN	VIETNAM

DMP180 / CORDLESS INFLATOR

Item	Sub	Parts No.	Parts Description	Qty	I/C	E/C No.	Close No.	Remark
001		TE00000421	DIGITAL DISPLAY	1				
002		TE00000204	SCREW 3X14	10				
003		TE00000420	HOUSING ASSEMBLY	1				
	D10		INC. 20,21					
004		TE00000338	MAT	2				
005		TE00000422	FIXED BRACKET	1				
006		TE00000352	CLAMP	1				
007		TE00000425	MOTOR ASSEMBLY	1				
008		TE00000339	RUBBER(CYLINDER)	2				
009		TE00000329	SWITCH	1				
010		TE00000327	SCREW 3*10	1				
011		TE00000328	TRIGGER SPRING-FIXED BLOCK	1				
012		TE00000330	SPRING	1				
013		TE00000331	SWITCH TRIGGER	1				
014		TE00000327	SCREW 3*10	2				
015		TE00000341	POWER ON/OFF	1				
016		TE00000342	LED PCB	1				
017		TE00000343	TERMINAL PROTECTOR	1				
018		TE00000424	BATTERY TERMINAL	1				
019		TE00000423	PCB	1				
020		TE00000420	HOUSING ASSEMBLY	1				
	D10		INC. 3,21					
021		TE00000426	SWITCH LABEL	1				
022		TE00000345	AIR PIPE ASSEMBLY	1				
	D10		INC. 23					
023		TE00000346	BRITISH ADAPTER	1				
A01		TE00000333	SWIM RING ADAPTER	1				
A02		TE00000335	BALL ADAPTER	1				
A03		TE00000334	FRENCH ADAPTER	1				

Interchange
O : Yes
X : No
< : the new part can be substituted for the current.
> : the current part can be substituted for the new.
S : Interchangeable as a set.