VN	VIETNAM

Diagram / Parts List

DHP483

CORDLESS HAMMER DRIVER DRILL

2021/06

(VN) DHP483 / CORDLESS HAMMER DRIVER DRILL

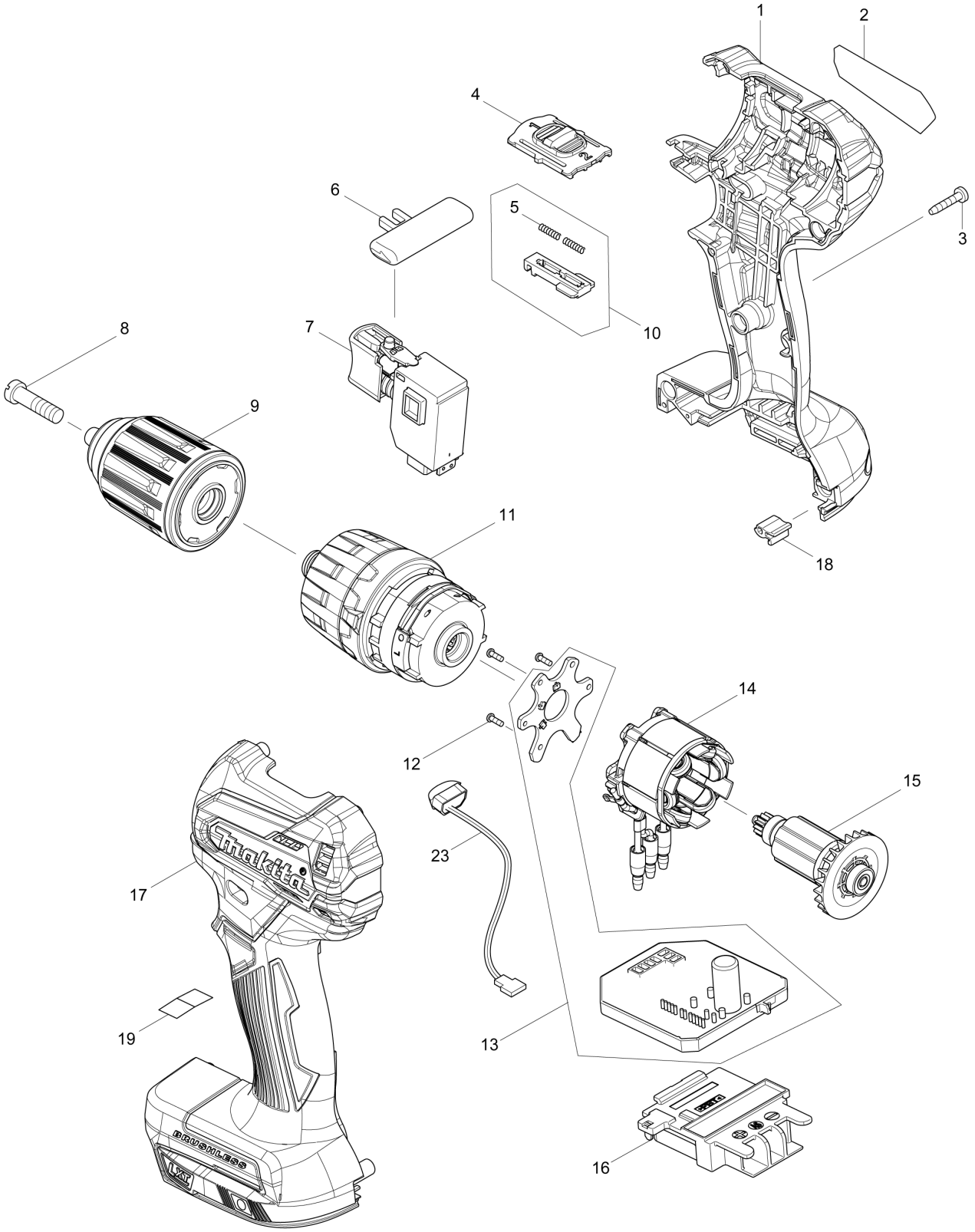

VN	VIETNAM

DHP483 / CORDLESS HAMMER DRIVER DRILL

Item	Sub	Parts No.	Parts Description	Qty	I/C	E/C No.	Close No.	Remark
001		183E19-5	HOUSING SET	1				
	C10	263005-3	RUBBER PIN 6	2				
	C20	252126-6	HEX. LOCK NUT M4-7	2				
	D10		INC. 17					
002		852L52-7	DHP483 NAME PLATE	1				
003		266429-2	TAPPING SCREW 3X16	8				
004		457020-9	SPEED CHANGE LEVER	1			B9732	
004-1		458382-8	SPEED CHANGE LEVER	1	<	B9732		
005		233025-1	COMPRESSION SPRING 2	2				
006		419041-9	F/R CHANGE LEVER	1				
007		650689-0	SWITCH C3JW-2B	1				
008		251468-5	- FLAT HEAD SCREW M6X22	1				
009		763241-6	KEYLESS DRILL CHUCK 13	1				
010		123587-6	CHANGE LEVER ASS'Y	1				
	D10		INC. 5					
011		123867-0	GEAR ASSEMBLY	1			D7899	
011-1		123867-0	GEAR ASSEMBLY	1	O	D7899		
012		266490-9	TAPPING SCREW PT 2X6	3				
013		620555-5	CONTROLLER	1				
014		629228-7	STATOR	1				
015		619410-6	ROTOR	1			D0256	
015-1		619410-6	ROTOR	1	O	D0256		
016		643874-2	TERMINAL	1				
017		183E19-5	HOUSING SET	1				
	C10	263005-3	RUBBER PIN 6	2				
	C20	252126-6	HEX. LOCK NUT M4-7	2				
	D10		INC. 1					
018		424517-3	CUSHION	1				
023		620549-0	LED CIRCUIT	1				
A01		251314-2	+ SCREW M4X12	1				
A02		346317-0	HOOK	1				
A03		784637-8	+- BIT 2-45	1				
A04B		141856-3	PLASTIC CARRYING CASE COMPLETE	1				
	C10	162302-3	LATCH	2				
A04C		141856-3	PLASTIC CARRYING CASE COMPLETE	1				
	C10	162302-3	LATCH	2				
A05B		450128-8	BATTERY COVER	1				
A05C		450128-8	BATTERY COVER	1				
A06B		***DC18RC	DC18RC FAST CHARGER	1				
	D10		COMPO-PARTS					
A06C		***DC18RC	DC18RC FAST CHARGER	1				
	D10		COMPO-PARTS					
A07B		197600-6	BATTERY BL1830B SET	2			C4176	
A07C		197280-8	BATTERY BL1850B SET	2			C5219	
A07-1B		197600-6	BATTERY BL1830B SET	2	O	C4176		
A07-1C		197280-8	BATTERY BL1850B SET	2	O	C5219		

B:DHP483RFE(H)
C:DHP483RTE(H)

Interchange
O : Yes
X : No
< : the new part can be substituted for the current.
> : the current part can be substituted for the new.
S : Interchangeable as a set.