VN	VIETNAM

Diagram / Parts List

DFV210

CORDLESS FAN VEST

2021/01

(VN) DFV210 / CORDLESS FAN VEST

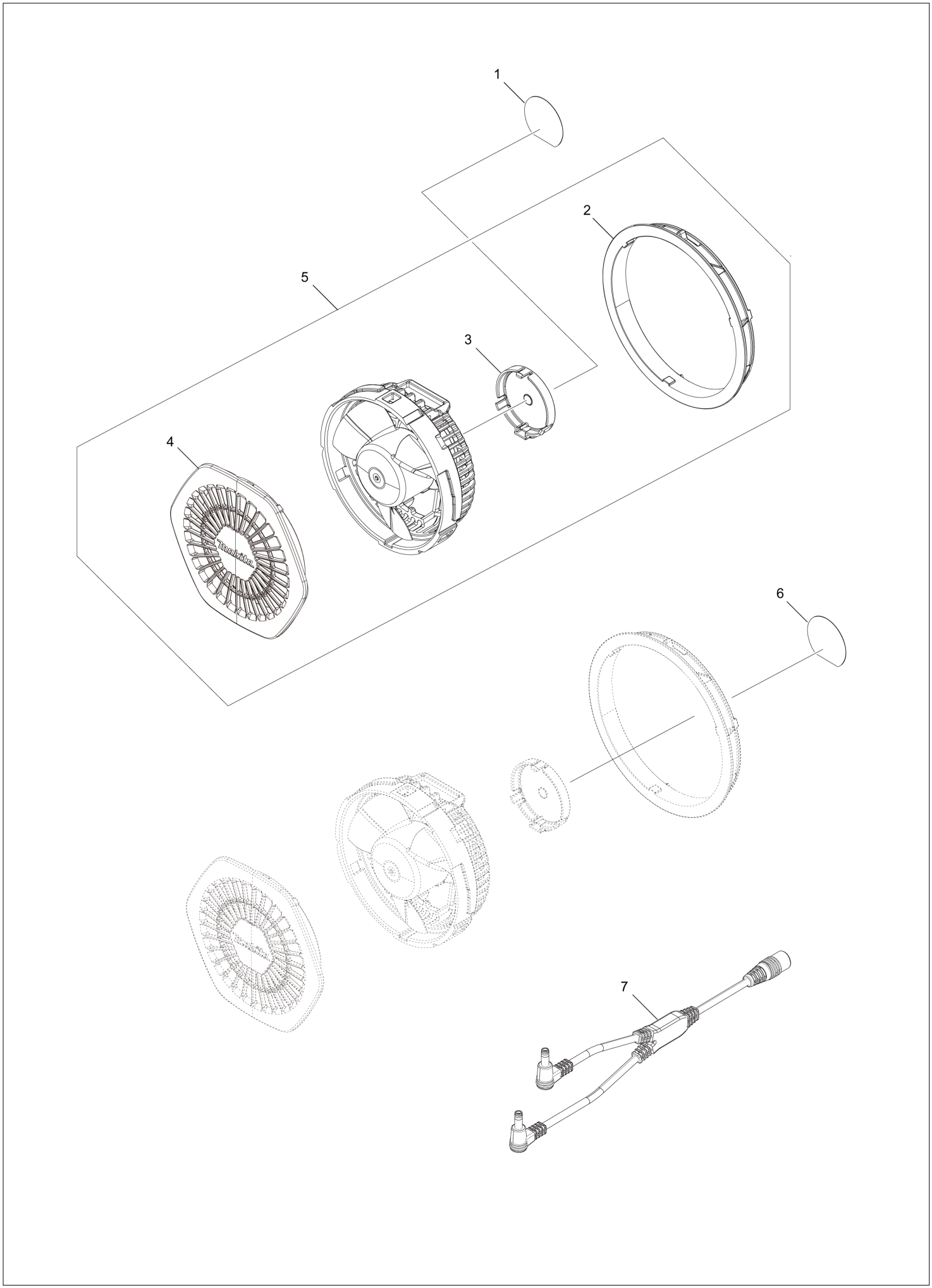

VN	VIETNAM

DFV210 / CORDLESS FAN VEST

Item	Sub	Parts No.	Parts Description	Qty	I/C	E/C No.	Close No.	Remark
001		854R15-5	DFV210 SERIAL NO. LABEL	1				
002		457875-2	LOCK RING	1				
003		458686-8	MOTOR COVER	1				
004		458685-0	FAN COVER	1				
005		126972-2	FAN UNIT ASSEMBLY	2				
	D10		INC. 2-4					
006		854P59-3	DFV210 NAME PLATE	1				
007		661752-4	CABLE UNIT	1				

Interchange
O : Yes
X : No
< : the new part can be substituted for the current.
> : the current part can be substituted for the new.
S : Interchangeable as a set.