| VN | VIETNAM |
|---|---|

# Diagram / Parts List

## DDA350

## CORDLESS ANGLE DRILL 10MM

2021/01

# (VN) DDA350 / CORDLESS ANGLE DRILL 10MM

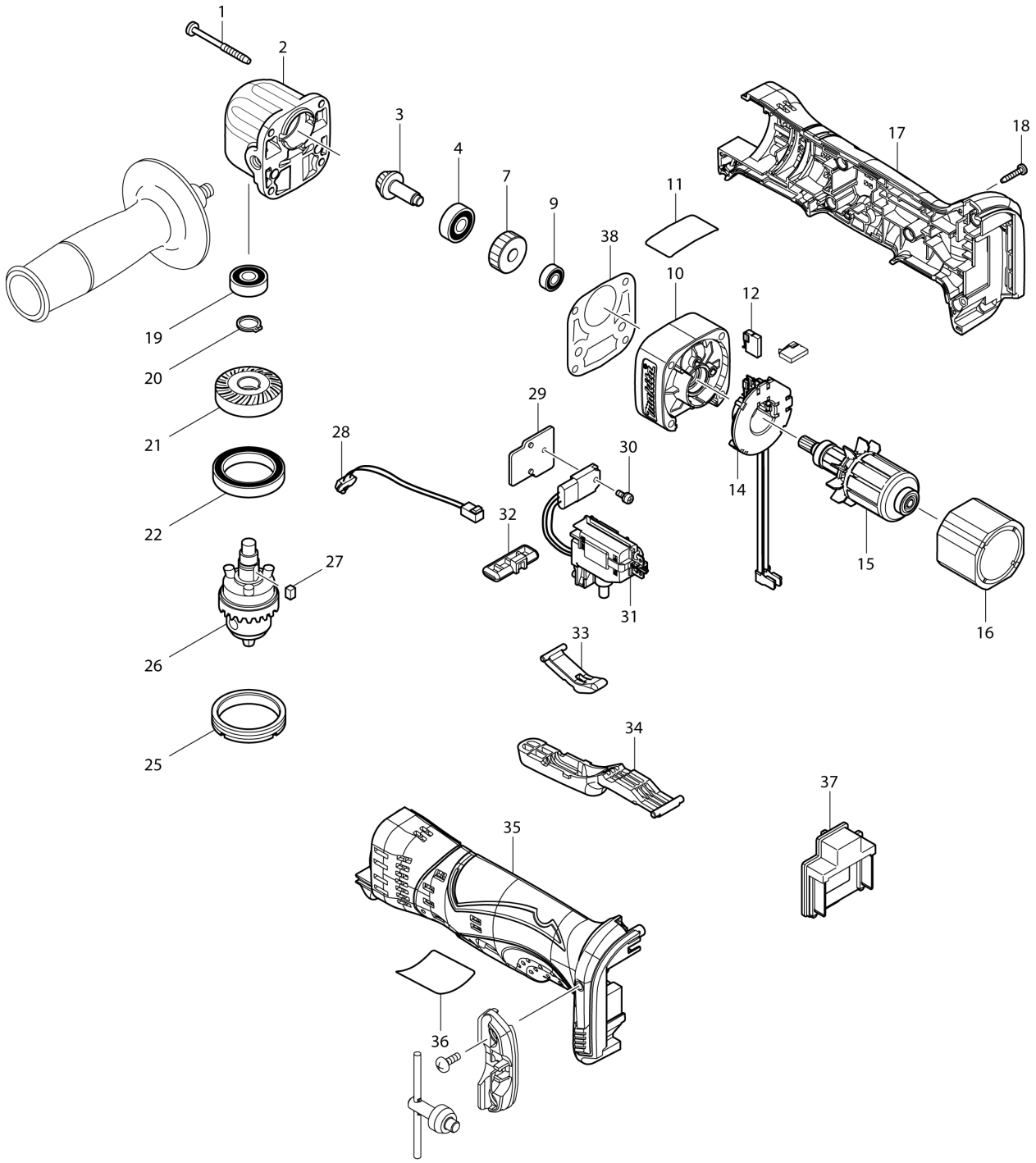

| VN | VIETNAM |
|---|---|

# DDA350 / CORDLESS ANGLE DRILL 10MM

| Item | Sub | Parts No. | Parts Description | Qty | I/C | E/C No. | Close No. | Remark |
|---|---|---|---|---|---|---|---|---|
| 001 | | 266069-6 | TAPPING SCREW 4X45 | 4 | | | | |
| 002 | | 317635-3 | GEAR HOUSING | 1 | | | | |
| 003 | | 227436-0 | SPIRAL BEVEL GEAR 9 | 1 | | | | |
| 004 | | 210029-0 | BALL BEARING 608ZZ | 1 | | | | |
| 007 | | 227230-0 | SPUR GEAR 29 | 1 | | | | |
| 009 | | 210033-9 | BALL BEARING 696ZZ | 1 | | | | |
| 010 | | 450607-6 | GEAR HOUSING COVER | 1 | | | | |
| 012 | | 195021-6 | CARBON BRUSH SET CB-440 | 1 | | | | |
| 014 | | 539189-2 | BRUSH HOLDER ASSY | 1 | | | | |
| | D10 | | INC. 12 | | | | | |
| 015 | | 619234-0 | ARMATURE | 1 | | | | |
| 016 | | 638613-3 | YOKE UNIT | 1 | | | | |
| 017 | | 187130-5 | HOUSING SET | 1 | | | | |
| | D10 | | INC. 35 | | | | | |
| 018 | | 266130-9 | TAPPING SCREW BIND PT 3X16 | 5 | | | | |
| 019 | | 210029-0 | BALL BEARING 608ZZ | 1 | | | | |
| 020 | | 961052-5 | RETAINING RING S-12 | 1 | | | | |
| 021 | | 227536-6 | SPIRAL BEVEL GEAR 26 | 1 | | | | |
| 022 | | 211423-9 | BALL BEARING 6806DDW | 1 | | | | |
| 025 | | 285842-5 | BEARING RETAINER 36-43 | 1 | | | | |
| 026 | | 763174-5 | DRILL CHUCK S10 | 1 | | | | |
| 027 | | 254201-4 | KEY 4 | 1 | | | | |
| 028 | | 631814-2 | LED CIRCUIT | 1 | | | | |
| 029 | | 689098-6 | HEAT SINK | 1 | | | | |
| 030 | | 911006-2 | PAN HEAD SCREW M3X8 | 1 | | | | |
| 031 | | 632B91-1 | SWITCH UNIT | 1 | | | | |
| 032 | | 450610-7 | F/R CHANGE LEVER | 1 | | | | |
| 033 | | 450609-2 | LINK | 1 | | | | |
| 034 | | 450608-4 | SWITCH LAVER | 1 | | | | |
| 035 | | 187130-5 | HOUSING SET | 1 | | | | |
| | D10 | | INC. 17 | | | | | |
| 036 | | 815P22-1 | DDA350 NAME PLATE | 1 | | | | |
| 037 | | 644808-8 | TERMINAL | 1 | | | | |
| 038 | | 418036-9 | GASKET | 1 | | | | |
| A01 | | 153489-2 | GRIP 36 COMPLETE | 1 | | | | |
| A02 | | 251314-2 | + SCREW M4X12 | 1 | | | | |
| A03 | | 450688-0 | KEY HOLDER | 1 | | | | |
| A04 | | 763415-9 | CHUCK KEY S10 | 1 | | | | |

Interchange
O : Yes
X : No
< : the new part can be substituted for the current.
> : the current part can be substituted for the new.
S : Interchangeable as a set.