VN	VIETNAM

Diagram / Parts List

DCL184

CORDLESS CLEANER

2021/01

(VN) DCL184 / CORDLESS CLEANER

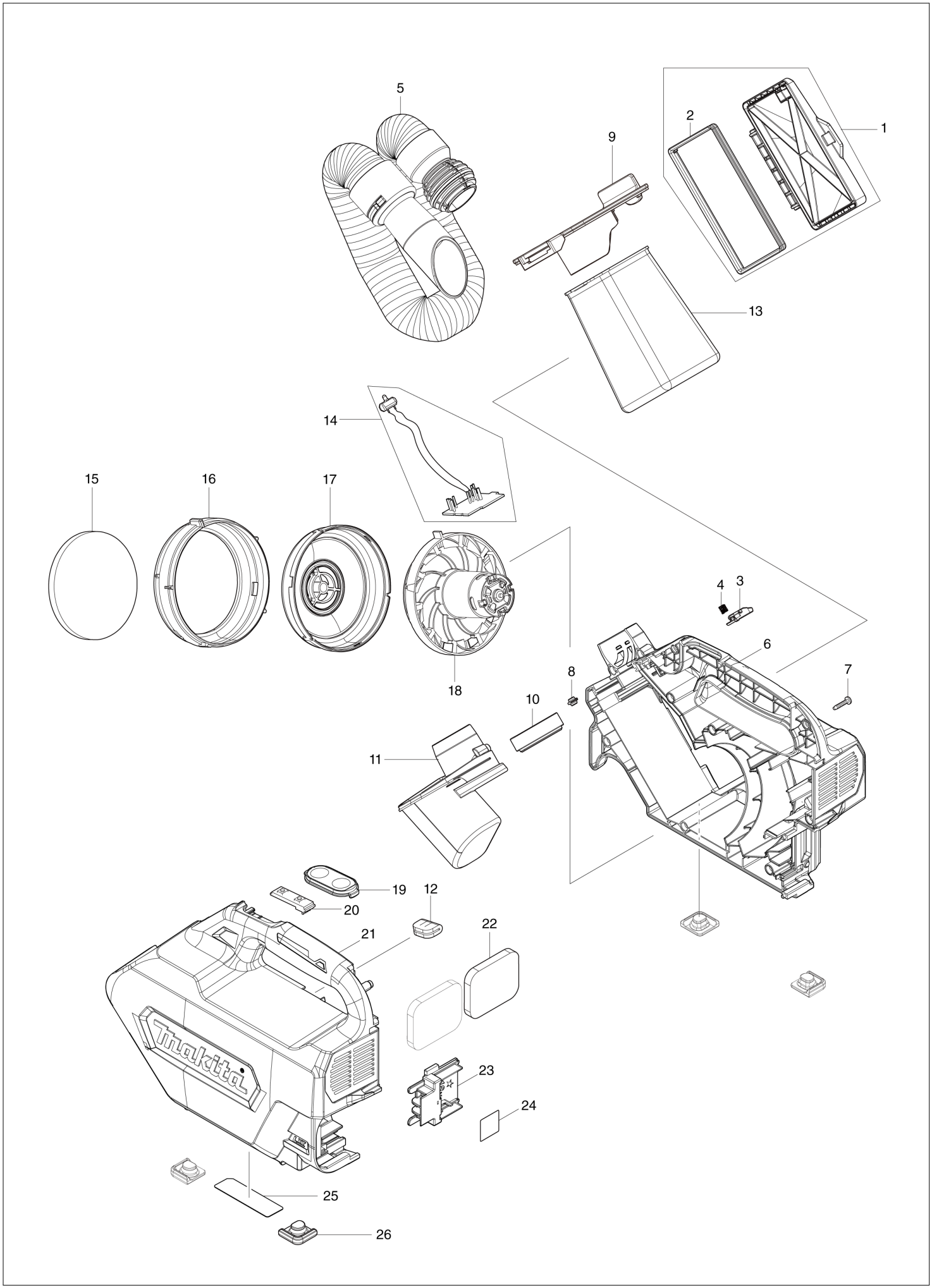

VN	VIETNAM

DCL184 / CORDLESS CLEANER

Item	Sub	Parts No.	Parts Description	Qty	I/C	E/C No.	Close No.	Remark
001		136100-1	DUST BOX COVER ASS'Y	1				
	D10		INC. 2					
002		422433-3	SEAL	1				
003		459050-6	STOPPER PLATE	1				
004		232485-4	COMPRESSION SPRING 5	1				
005		140H92-6	HOSE COMPLETE	1				
	C10	459042-5	STRAIGHT PIPE	1				
	C20	459044-1	STOPPER	1				
006		183R28-2	HOUSING SET	1				
	C10	422619-9	DAMPER A	1				
	C20	422620-4	DAMPER B	1				
	C30	263005-3	RUBBER PIN 6	2				
	D10		INC. 12,21					
007		266429-2	TAPPING SCREW 3X16	10				
008		450522-4	LENS	1				
009		143677-9	VALVE STAY COMPLETE	1				
010		422434-1	PACKING	1				
011		459048-3	HOSE JOINT HOLDER	1				
012		424246-8	SPONGE SHEET	1				
013		166084-9	DUST BAG	1				
014		620D43-6	CONTROLLER	1				
015		422440-6	SPONGE SHEET 90	1				
016		422421-0	RUBBER RING	1				
017		459035-2	FAN COVER	1				
018		127654-9	MOTOR ASSEMBLY	1				
019		144096-2	SWITCH PLATE COMPLETE	1				
	C10	810P35-7	SWITCH LABEL	1				
020		631973-2	SWITCH UNIT	1				
021		183R28-2	HOUSING SET	1				
	C10	422619-9	DAMPER A	1				
	C20	422620-4	DAMPER B	1				
	C30	263005-3	RUBBER PIN 6	2				
	D10		INC. 6,12					
022		422439-1	SPONGE SHEET 47-57	2				
023		643874-2	TERMINAL	1				
024		857N50-8	DCL184 SERIAL NO. LABEL	1				
025		857N43-5	DCL184 NAME PLATE	1				
026		422435-9	FOOT	4				
A01		140H94-2	SOFT BRUSH 360 COMPLETE	1				
A02		140H95-0	SEAT NOZZLE 120 COMPLETE	1				
A03		140J64-3	BLOWER NOZZLE COMPLETE	1				
A04		162544-9	SHOULDER BELT	1				
A05		194566-1	PAPER FILTER SET (5PCS/SET)	1				
A06		422437-5	RUBBER NOZZLE 330	1				
A07		459056-4	MAT NOZZLE 120	1				
A08B		450128-8	BATTERY COVER	1				
A09B		197600-6	BATTERY BL1830B SET	1				
A10B		***DC18RC	DC18RC FAST CHARGER	1				
	D10		COMPO-PARTS					
A11B		832188-6	TOOL BAG	1				

B:DCL184RF(H)

Interchange
O : Yes
X : No
< : the new part can be substituted for the current.
> : the current part can be substituted for the new.
S : Interchangeable as a set.