VN	VIETNAM

Diagram / Parts List

DCL140

CORDLESS CLEANER

2021/05

(VN) DCL140 / CORDLESS CLEANER

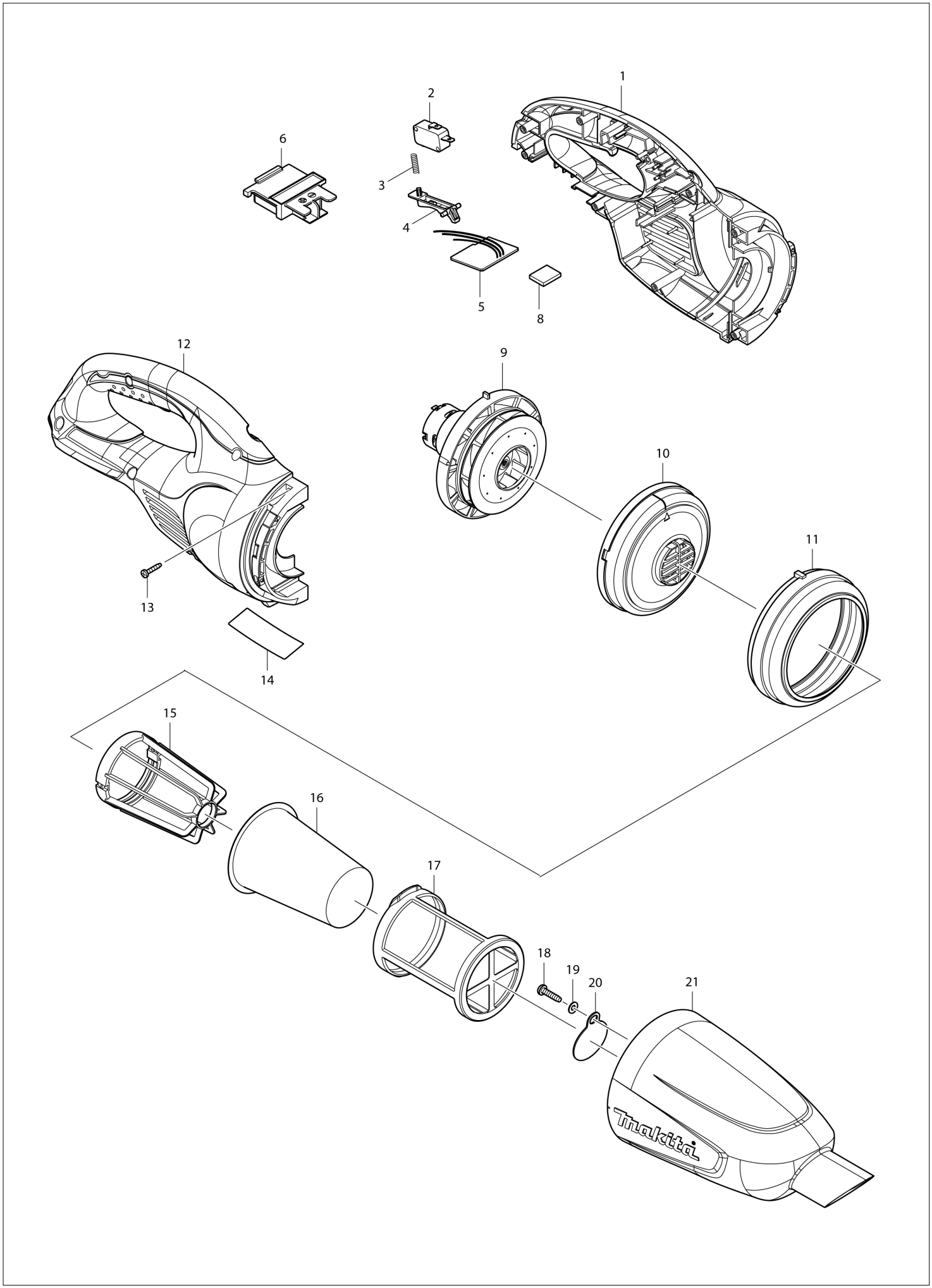

VN	VIETNAM

DCL140 / CORDLESS CLEANER

Item	Sub	Parts No.	Parts Description	Qty	I/C	E/C No.	Close No.	Remark
001		187464-6	HOUSING SET	1				
	C10	424209-4	SPONGE SHEET 50-50	2				
	D10		INC. 12					
002		651891-8	SWITCH V-15-3A6	1			A9532	
002-1		650744-8	SWITCH D3V-16-3C26	1	O	A9532		
003		231473-8	COMPRESSION SPRING 4	1				
004		451227-9	SWITCH LEVER	1				
005		638936-9	CONTROLLER UNIT	1				
006		643850-6	TERMINAL	1				
008		424248-4	SPONGE SHEET 15-25	1				
009		125865-0	MOTOR ASS'Y	1				
	C10	452455-9	BASE	1				
	C20	265199-0	+ PAN HEAD SCREW M3X8	2				
	C30	240102-2	FAN 82	1				
010		416030-5	FAN COVER	1				
011		424320-2	RUBBER RING	1				
012		187464-6	HOUSING SET	1				
	C10	424209-4	SPONGE SHEET 50-50	2				
	D10		INC. 1					
013		266429-2	TAPPING SCREW 3X16	7				
014		815F39-4	DCL140 NAME PLATE	1				
015		410237-5	STAY	1			C1159	
015-1		458467-0	STAY	1	<	C1159		
016		443060-3	FILTER	1				
017		451208-3	PRE-FILTER	1				
018		265995-6	TAPPING SCREW 4X18	1				
019		941051-3	FLAT WASHER 4	1				
020		424208-6	VALVE	1				
021		451235-0	CAPSULE	1				
022		424308-2	SPONGE SHEET 50-36	1				
023		632H18-7	FUSE UNIT	1		B2684		
024		422268-2	SPONGE SHEET 57	1		C1159		
A01		122859-6	NOZZLE ASS'Y	1			A9870	
	C10	451410-8	ROLLER	4			A9870	
	C20	268208-4	PIN 3	4			A9870	
	C30	424096-1	WIPER	1			A9870	
A01-1		123488-8	FLOOR T-NOZZLE 28 BLU	1	<	A9870		
	C10	451410-8	ROLLER	4		A9870		
	C20	268208-4	PIN 3	4		A9870		
	C30	424096-1	WIPER	1		A9870		
A02		451243-1	SASH NOZZLE 28 BLU	1				
A03		451244-9	PIPE	1				
A04		451245-7	SASH NOZZLE HOLDER	1				
A05		199971-7	HOLDER SET	1		C3114		

Interchange
O : Yes
X : No
< : the new part can be substituted for the current.
> : the current part can be substituted for the new.
S : Interchangeable as a set.