VN	VIETNAM

Diagram / Parts List

CL111D

CORDLESS CLEANER

2021/01

(VN) CL111D / CORDLESS CLEANER

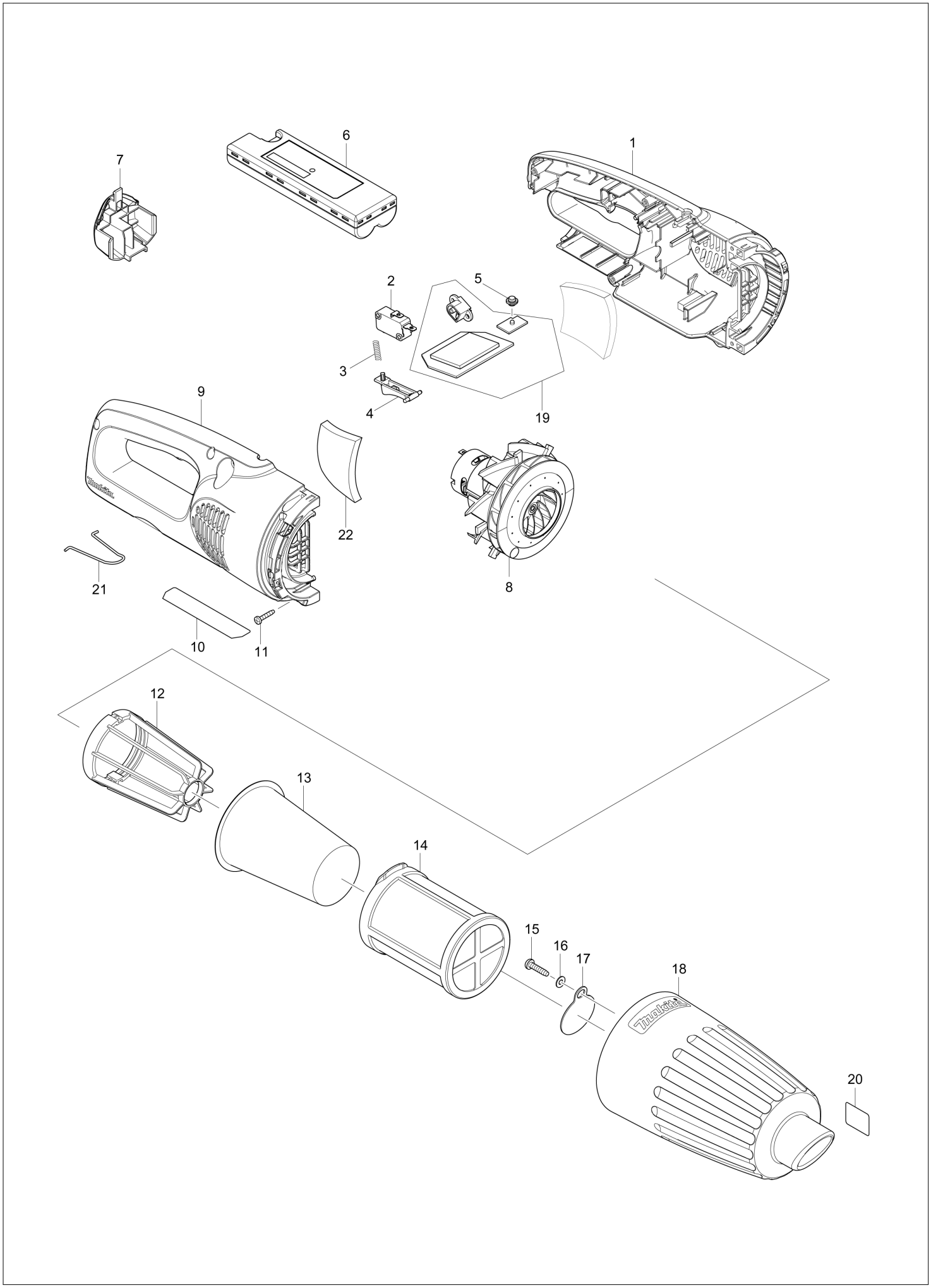

VN	VIETNAM

CL111D / CORDLESS CLEANER

Item	Sub	Parts No.	Parts Description	Qty	I/C	E/C No.	Close No.	Remark
001A		183G27-8	HOUSING SET	1			C2231	
001B		183G28-6	HOUSING SET	1			C2231	
	D10		INC. 9				C2231	
001-1A		183K02-8	HOUSING SET	1	S	C2231		
001-1B		183K03-6	HOUSING SET	1	S	C2231		
	D10		INC. 9,22			C2231		
002		650744-8	SWITCH D3V-16-3C26	1				
003		231473-8	COMPRESSION SPRING 4	1				
004		451210-6	SWITCH LEVER	1				
005		450522-4	LENS	1				
006		632C23-4	BATTERY	1				
007A		454080-2	COVER	1				
007B		455348-9	COVER	1				
008		123997-7	MOTOR ASSEMBLY	1				
009A		183G27-8	HOUSING SET	1			C2231	
009B		183G28-6	HOUSING SET	1			C2231	
	D10		INC. 1				C2231	
009-1A		183K02-8	HOUSING SET	1	S	C2231		
009-1B		183K03-6	HOUSING SET	1	S	C2231		
	D10		INC. 1,22			C2231		
010		853L54-6	CL111D NAME PLATE	1				
011		266429-2	TAPPING SCREW 3X16	5				
012		410237-5	STAY	1			C1159	
012-1		458467-0	STAY	1	<	C1159		
013		443060-3	FILTER	1				
014		451208-3	PRE-FILTER	1				
015		265995-6	TAPPING SCREW 4X18	1				
016		941051-3	FLAT WASHER 4	1				
017		424208-6	VALVE	1				
018A		457643-3	CAPSULE	1				
018B		457646-7	CAPSULE	1				
019		632K44-4	CONTROLLER UNIT	1				
020		809293-4	INDICATION LABEL	1				
021		324885-3	HANGER	1				
022		422152-1	SPONGE SHEET 43-58	2			C2231	
022-1		422152-1	SPONGE SHEET 43-58	2	O	C2231		
023		422268-2	SPONGE SHEET 57	1		C1159		
A01A		198150-4	FLOOR/CARPET T-NOZZLE IVO	1				
A01B		198524-9	FLOOR/CARPET T-NOZZLE RED	1				
A02A		416041-0	SASH NOZZLE 28 IVO	1				
A02B		416225-0	SASH NOZZLE 28 RED	1				
A03A		416043-6	SASH NOZZLE HOLDER (IVORY)	1				
A03B		416227-6	SASH NOZZLE HOLDER (RED)	1				
A04A		451424-7	PIPE	1				
A04B		451425-5	PIPE (RED)	1				
A05		***DC1001	DC1001 BATTERY CHARGER SET	1				

A:
B:

Interchange
O : Yes
X : No
< : the new part can be substituted for the current.
> : the current part can be substituted for the new.
S : Interchangeable as a set.