VN	VIETNAM

Diagram / Parts List

6951

IMPACT DRIVER

2021/05

(VN) 6951 / IMPACT DRIVER

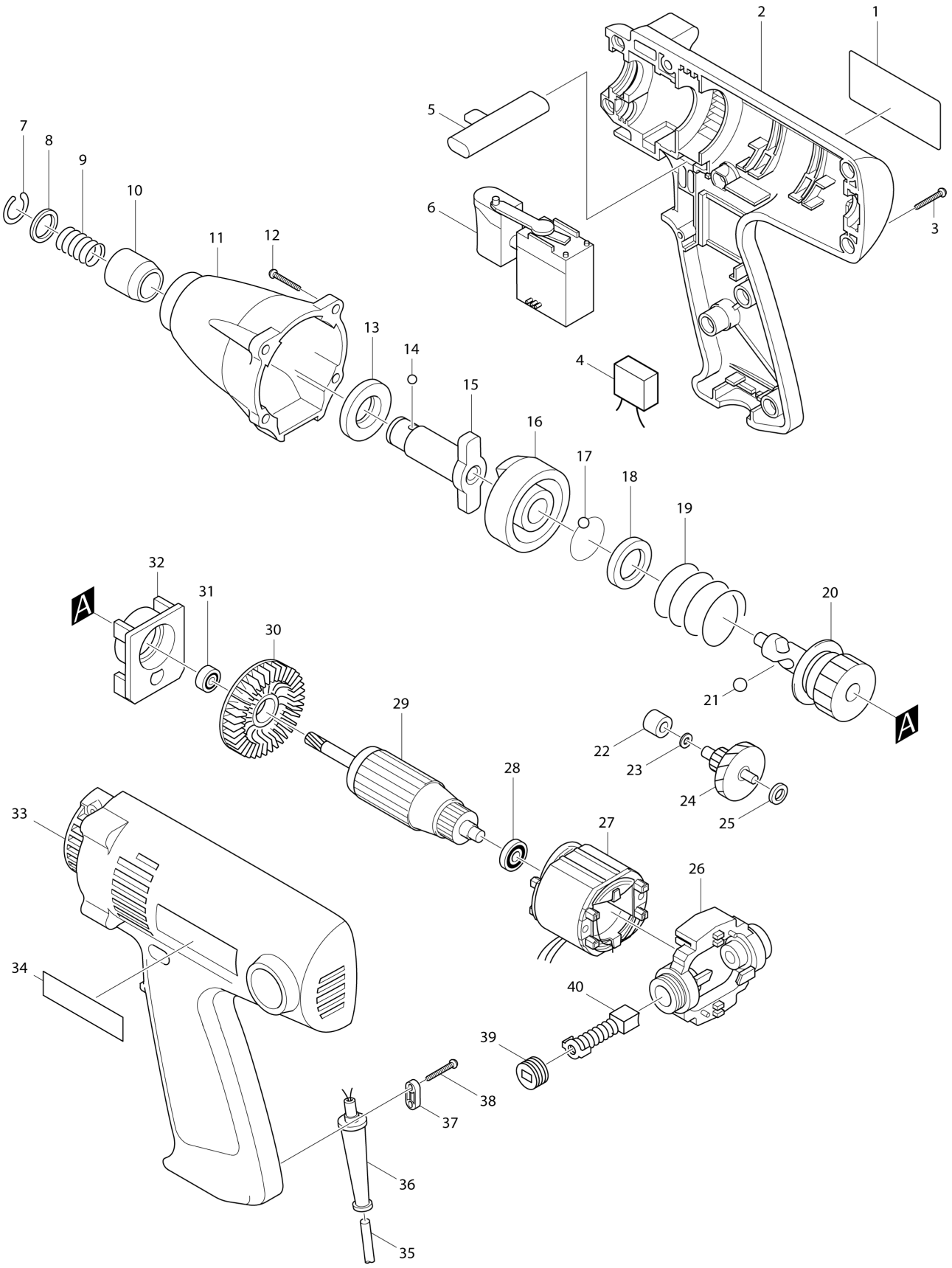

VN	VIETNAM

6951 / IMPACT DRIVER

Item	Sub	Parts No.	Parts Description	Qty	I/C	E/C No.	Close No.	Remark
001		859465-1	NAME PLATE 6951	1				
002		182995-0	HOUSING SET	1				
	D10		INC. 33,34					
003		265995-6	TAPPING SCREW 4X18	9				
005		416522-4	CHANGE LEVER	1				
006-1		651965-5	SWITCH C3MA	1	O	61109	62995A	
006-2		651965-5	SWITCH C3MA	1	O	62995A		
007		231951-8	RING SPRING 11	1				
008		267085-1	FLAT WASHER 12	1				
009		233005-7	COMPRESSION SPRING 13	1				
010		322434-0	SLEEVE	1			68964	
010-1		324420-7	SLEEVE	1	O	68964		
011		152583-7	HAMMER CASE COMPLETE	1				
012		265995-6	TAPPING SCREW 4X18	4				
013		261099-2	NYLON WASHER 14	1				
014		216001-0	STEEL BALL 3.5	2				
015		322705-5	ANVIL N	1				
016		322793-2	HAMMER	1				
017		216001-0	STEEL BALL 3.5	24				
018		267126-3	FLAT WASHER 22	1				
019		233111-8	COMPRESSION SPRING 24	1				
020		153230-3	SPINDLE COMPLETE	1				
021		216011-7	STEEL BALL 5.6	2				
022		214034-9	PLANE BEARING 5	1				
023		253811-4	FLAT WASHER 5	1				
024		226815-9	GEAR COMPLETE 9-34	1				
025		267099-0	FLAT WASHER 4	1				
026		152582-9	HOLDER ARM COMPLETE	1				
027B_		635023-5	FIELD 220V	1				
028		211023-5	BALL BEARING 607LB	1				
029B_		517528-6	ARMATURE ASS'Y 220V	1				
	D10		INC. 28,30,31					
030		240014-9	FAN 40	1				
031		210005-4	BALL BEARING 608DDW	1				
032		152465-3	BEARING CASE COMPLETE	1				
033		182995-0	HOUSING SET	1				
	D10		INC. 2,34					
034		819063-3	MAKITA LABEL	1				
035H_		691065-9	POWER SUPPLY CORD 0.75-2-2.5	1				
036		682502-4	CORD GUARD 8-85	1				
037		687052-4	STRAIN RELIEF	1				
038		265995-6	TAPPING SCREW 4X18	2				
039		643928-5	BRUSH HOLDER CAP	2				
040A		191940-4	CARBON BRUSH CB-411	1			85070	
040A1		B-80391	CARBON BRUSH SET CB-411A	1	<	85070		
A01		824439-1	PLASTIC CARRYING CASE	1				
E07		784203-1	PHILLIPS BIT 2-65	1			69111	
E07-1		784203-1	PHILLIPS BIT 2-65	1	O	69111	89859	
E07-2		784203-1	PHILLIPS BIT 2-65	1	O	89859		

Interchange
O : Yes
X : No
< : the new part can be substituted for the current.
> : the current part can be substituted for the new.
S : Interchangeable as a set.