VN	VIETNAM

Diagram / Parts List

6412

DRILL 10MM

2021/05

(VN) 6412 / DRILL 10MM

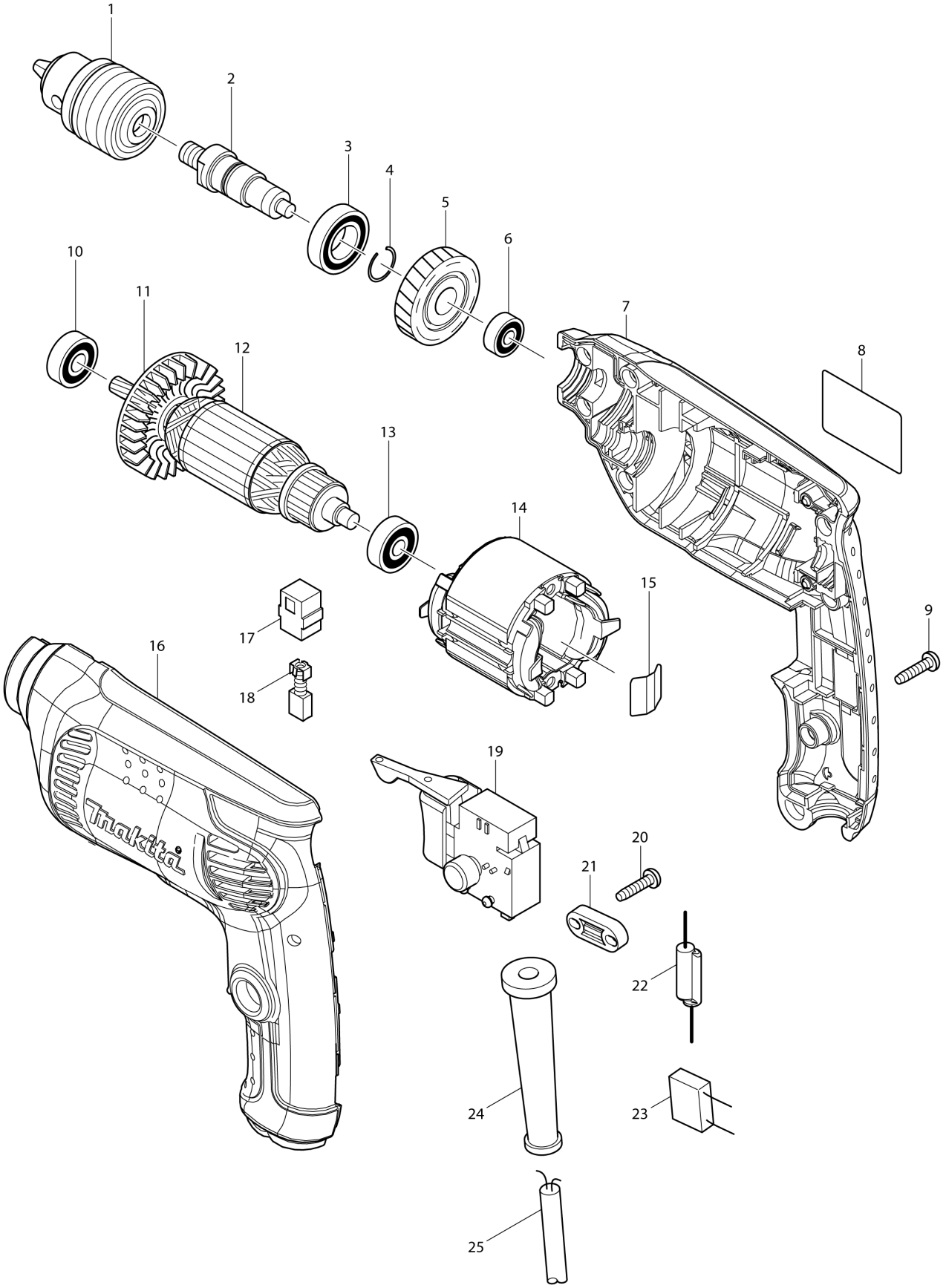

VN	VIETNAM

6412 / DRILL 10MM

Item	Sub	Parts No.	Parts Description	Qty	I/C	E/C No.	Close No.	Remark
001		193706-8	DRILL CHUCK S10	1			B6716	
001-1		193706-8	DRILL CHUCK S10	1	<	B6716	B8873	
001-2		763244-0	DRILL CHUCK S10	1	O	B8873		
002		324376-4	SPINDLE	1				
003		211242-3	BALL BEARING 6902ZZ	1				
004		233925-5	RING SPRING 13	1				
005		226578-7	HELICAL GEAR 35	1				
006		210028-2	BALL BEARING 606ZZ	1				
007		188277-8	HOUSING SET	1				
	C10	263002-9	RUBBER PIN 4	2				
	D10		INC. 16					
008		863394-2	6412 NAME PLATE	1		94702		
009		266326-2	TAPPING SCREW 4X18	7				
010		211032-4	BALL BEARING 608ZZ	1				
011		240066-0	FAN 52	1				
012		515698-5	ARMATURE ASS'Y 220V	1				
	D10		INC. 10,11,13					
013		210030-5	BALL BEARING 627ZZ	1				
014		593643-0	FIELD ASS'Y 220V	1			A7131	
	C10	654037-5	INSULATED TERM. FT1.25-M3	1			Y06150	Y04979
	C11	654037-5	INSULATED TERM. FT1.25-M3	1	O	Y06150	A7131	Y04979
014-1		599368-4	FIELD ASS'Y 220V	1	<	A7131		
	C11	654037-5	INSULATED TERM. FT1.25-M3	1	O	A7131		
015		232210-3	LEAF SPRING	1				
016		188277-8	HOUSING SET	1				
	C10	263002-9	RUBBER PIN 4	2				
	D10		INC. 7					
017		643563-9	BRUSH HOLDER 5X8	2				
018		A-81206	CARBON BRUSH CB-64A	1			83185	
018-1		B-80195	CARBON BRUSH CB-64A	1	O	83185	85070	
018-2		B-80254	CARBON BRUSH SET CB-64A	1	<	85070		
019		650586-0	SWITCH DGQ-1104H	1				
020		266326-2	TAPPING SCREW 4X18	2				
021		687124-5	STRAIN RELIEF	1				
022		646151-1	CHOKE COIL	1		A7131		
023		645190-8	NOISE SUPPRESSOR	1		A7131		
024		682569-2	CORD GUARD 8-85	1				
025		691055-2	POWER SUPPLY CORD 0.75-2-2.0	1				
A01		418163-2	KEY HOLDER 10	1				
A02		763444-2	CHUCK KEY S10	1			B8873	
A02-1		763447-6	CHUCK KEY S10	1	O	B8873		

Interchange
O : Yes
X : No
< : the new part can be substituted for the current.
> : the current part can be substituted for the new.
S : Interchangeable as a set.