VN	VIETNAM

Diagram / Parts List

6307

DRILL 13MM

2020/12

(VN) 6307 / DRILL 13MM

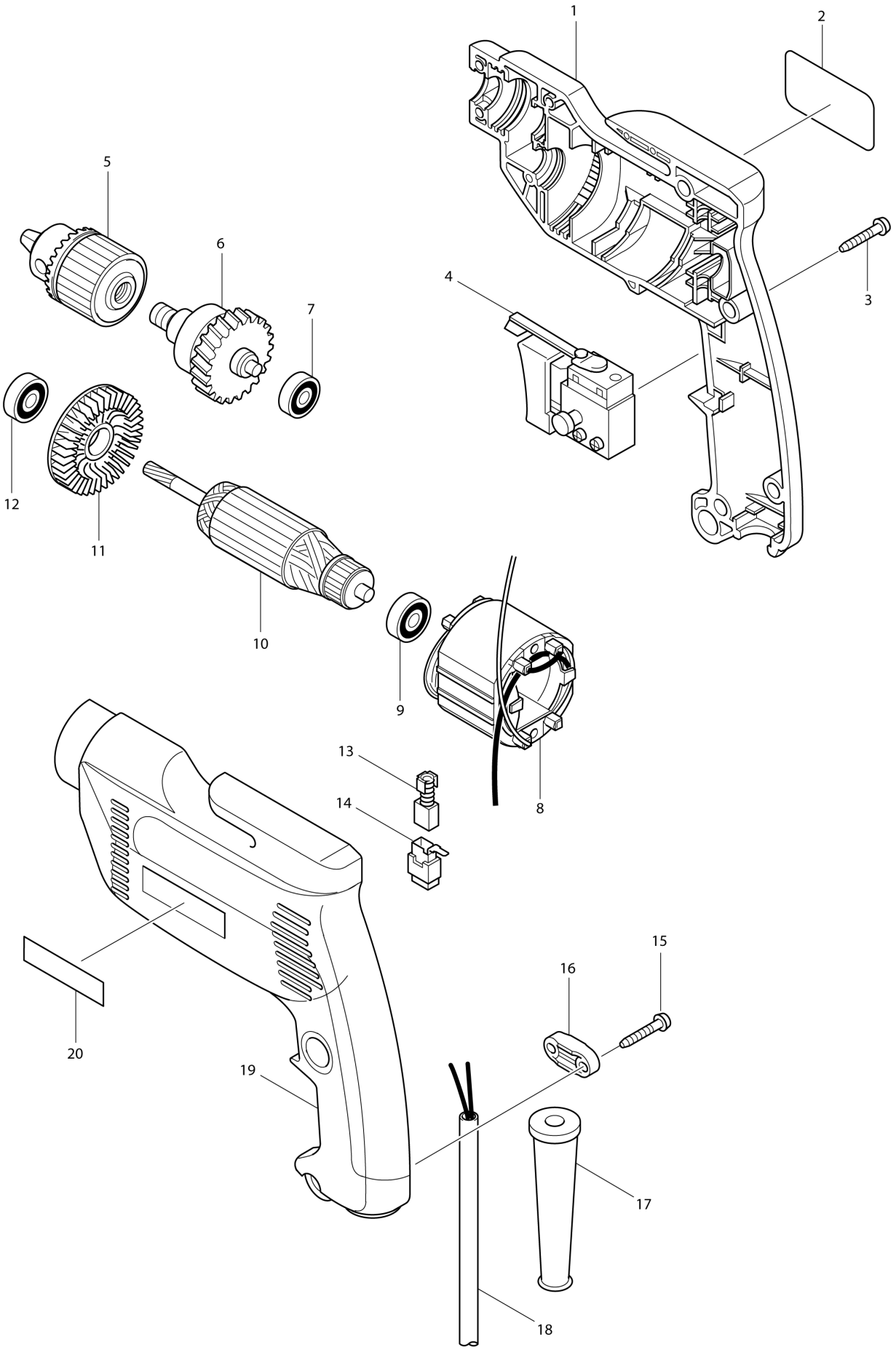

VN	VIETNAM

6307 / DRILL 13MM

Item	Sub	Parts No.	Parts Description	Qty	I/C	E/C No.	Close No.	Remark
001		182862-9	HOUSING SET	1				
	D10		INC. 19					
001-1		182862-9	HOUSING SET	1	X	59754A		
	D10		INC. 19					
002		859269-1	NAME PLATE 6307	1				
003		265995-6	TAPPING SCREW 4X18	8				
004A_		651952-4	SWITCH 8653C721AD 200V-240V	1				
004A1		651987-5	SWITCH	1	X	59754A	62690	
004A2		651987-5	SWITCH	1	X	62690	63878	
004A3		651987-5	SWITCH	1	O	63878	63971	
004A4		651986-7	SWITCH TG803TLB-1	1	O	63971		
005		763115-1	DRILL CHUCK S13	1				
006		153253-1	GEAR COMPLETE	1				
007		211020-1	BALL BEARING 626Z	1			75942	
007-1		210047-8	BALL BEARING 626Z	1	O	75942		
008A_		633338-4	FIELD 220/240V	1				
009		211030-8	BALL BEARING 627Z	1				
010A_		517198-1	ARMATURE ASS'Y 220/240V	1				
	D10		INC. 9,11,12					
011		241881-5	FAN 52	1				
012		211030-8	BALL BEARING 627Z	1				
013A_		191962-4	CARBON BRUSH CB-419	1			85070	
013A1		B-80422	CARBON BRUSH SET CB-419A	1	<	85070		
014-1		643936-6	BRUSH HOLDER	2				
015		265995-6	TAPPING SCREW 4X18	2				
016		687053-2	STRAIN RELIEF	1				
017		682504-0	CORD GUARD 10-85	1				
018A_		691015-4	POWER SUPPLY CORD 0.75-2-2.5	1				
019		182862-9	HOUSING SET	1				
	D10		INC. 1					
019-1		182862-9	HOUSING SET	1	X	59754A		
	D10		INC. 1					
020		819063-3	MAKITA LABEL	1				
A01		763430-3	CHUCK KEY S13	1				
E03		410102-8	KEY HOLDER	1				
E04		191962-4	CARBON BRUSH CB-419	2			85070	
E04-1		B-80422	CARBON BRUSH SET CB-419A	2	<	85070	87444	
E05		534023-1	LEAD ASS'Y (ORANGE)	1				
E06		534024-9	LEAD ASS'Y (PURPLE)	1				
E07		534027-3	LEAD ASS'Y (BLACK)	1				
E08		645253-0	NOISE SUPPRESSOR	1		A7339		

Interchange
O : Yes
X : No
< : the new part can be substituted for the current.
> : the current part can be substituted for the new.
S : Interchangeable as a set.